TERRI

FOR ALL TERRAIN

Rev	Note	Rev. date	Approved by

Terri 3 : Circuit Diagram

Drawing nr: 703074

Version	Current edition by	Current edition date
A	CV	2022-11-23

TERRI FOR ALL TERRAIN

Cover Sheet

Terri
0476-709790
www.terri.se

Approved by	
Approved date	
Designed by	CV
Date	2022-11-23

Sheet	Next	# sheets	Edition
0	1	39	A

Sheet	Sheet Title	Sheet Type	Date	Edition	Editor
0	Cover Sheet		2022-11-23		CV
1	Crane Lights	LIST OF CONTENTS	2022-11-23		CV
2	Engine Relays & Fuses		2022-11-23		CV
10	Power Supply	CIRCUIT DIAGRAM	2022-11-23		CV
11	ECM Power Supply	CIRCUIT DIAGRAM	2022-11-23		CV
12	ECM Auxiliary	CIRCUIT DIAGRAM	2022-11-23		CV
13	ECM Engine Interface	CIRCUIT DIAGRAM	2022-11-23		CV
14	Chair	CIRCUIT DIAGRAM	2022-11-23		CV
15	Drive Valves	CIRCUIT DIAGRAM	2022-11-23		CV
16	Crane Valves	CIRCUIT DIAGRAM	2022-11-23		CV
101	Relays K1-K9	CIRCUIT DIAGRAM	2022-11-23		CV
102	Relays K10-K16	CIRCUIT DIAGRAM	2022-11-23		CV
103	Switches S1-S5	CIRCUIT DIAGRAM	2022-11-23		CV
104	Switches S7-S12	CIRCUIT DIAGRAM	2022-11-23		CV
105	Switches S15-S18	CIRCUIT DIAGRAM	2022-11-23		CV
106	X1 Terminal 1-12	CIRCUIT DIAGRAM	2022-11-23		CV
107	X1 Terminal 13-24	CIRCUIT DIAGRAM	2022-11-23		CV
108	X1 Fuses 31-43	CIRCUIT DIAGRAM	2022-11-23		CV
109	X1 Fuses 44-55	CIRCUIT DIAGRAM	2022-11-23		CV
110	Extras	CIRCUIT DIAGRAM	2022-11-23		CV
111	Radio	CIRCUIT DIAGRAM	2022-11-23		CV
112	LogMax K9,K10,K14	CIRCUIT DIAGRAM	2022-11-23		CV
113	LogMax K11,K12,K13	CIRCUIT DIAGRAM	2022-11-23		CV
114	FogMaker	CIRCUIT DIAGRAM	2022-11-23		CV
115	Whiper and Cameras	CIRCUIT DIAGRAM	2022-11-23		CV
116	HVAC Actuators	CIRCUIT DIAGRAM	2022-11-23		CV
117	Webasto	CIRCUIT DIAGRAM	2022-11-23		CV
118	ECC	CIRCUIT DIAGRAM	2022-11-23		CV
119	Pedals	CIRCUIT DIAGRAM	2022-11-23		CV
120	Work Lights	CIRCUIT DIAGRAM	2022-11-23		CV
121	Condensor	CIRCUIT DIAGRAM	2022-11-23		CV
122	Travel Lights	CIRCUIT DIAGRAM	2022-11-23		CV
123	Rear Lights	CIRCUIT DIAGRAM	2022-11-23		CV
124	Hydraulic Pressure Sensors	CIRCUIT DIAGRAM	2022-11-23		CV
125	Hydraulic Servo Valves 1	CIRCUIT DIAGRAM	2022-11-23		CV
126	Hydraulic Servo Valves 2	CIRCUIT DIAGRAM	2022-11-23		CV
127	Extra Sensors	CIRCUIT DIAGRAM	2022-11-23		CV
128	Extra Sensors	CIRCUIT DIAGRAM	2022-11-23		CV
129	Crane Lights	CIRCUIT DIAGRAM	2022-11-23		CV

Rev	Note	Rev. date	Approved by

Terri 3 : Circuit Diagram

Drawing nr:703074

Version	Current edition by	Current edition date
A	CV	2022-11-23

FOR ALL TERRAIN

List Of Content

LIST OF CONTENTS

Terri
0476-709790
www.terri.se

Approved by	
Approved date	
Designed by	CV
Date	2022-11-23

Sheet	Next	# sheets	Edition
1	2	39	A

Ter-104742

Fuse	Size	Type	Function
F1	40A	Maxi	Engine ECU Main Power
F2	30A	Maxi	Engine Glow Plugs
F3	40A	Maxi	External Diesel/Hydraulic Fill Pump
F4	20A	Standard	Engine Starter Motor Solenoid
F5	5A	Mini	Low Pressure Fuel Pump Relay
F6	7.5A	Mini	Low Pressure Fuel Pump

Ter-104742

Relay	Type	Function
K1	Mini	Engine ECU Main Power Relay
K2	Mini	Engine Glow Plug Relay
K3	Micro	Low Pressure Fuel Pump Relay
K4	Micro	Engine Starter Motor Solenoid Relay

Ter-104742

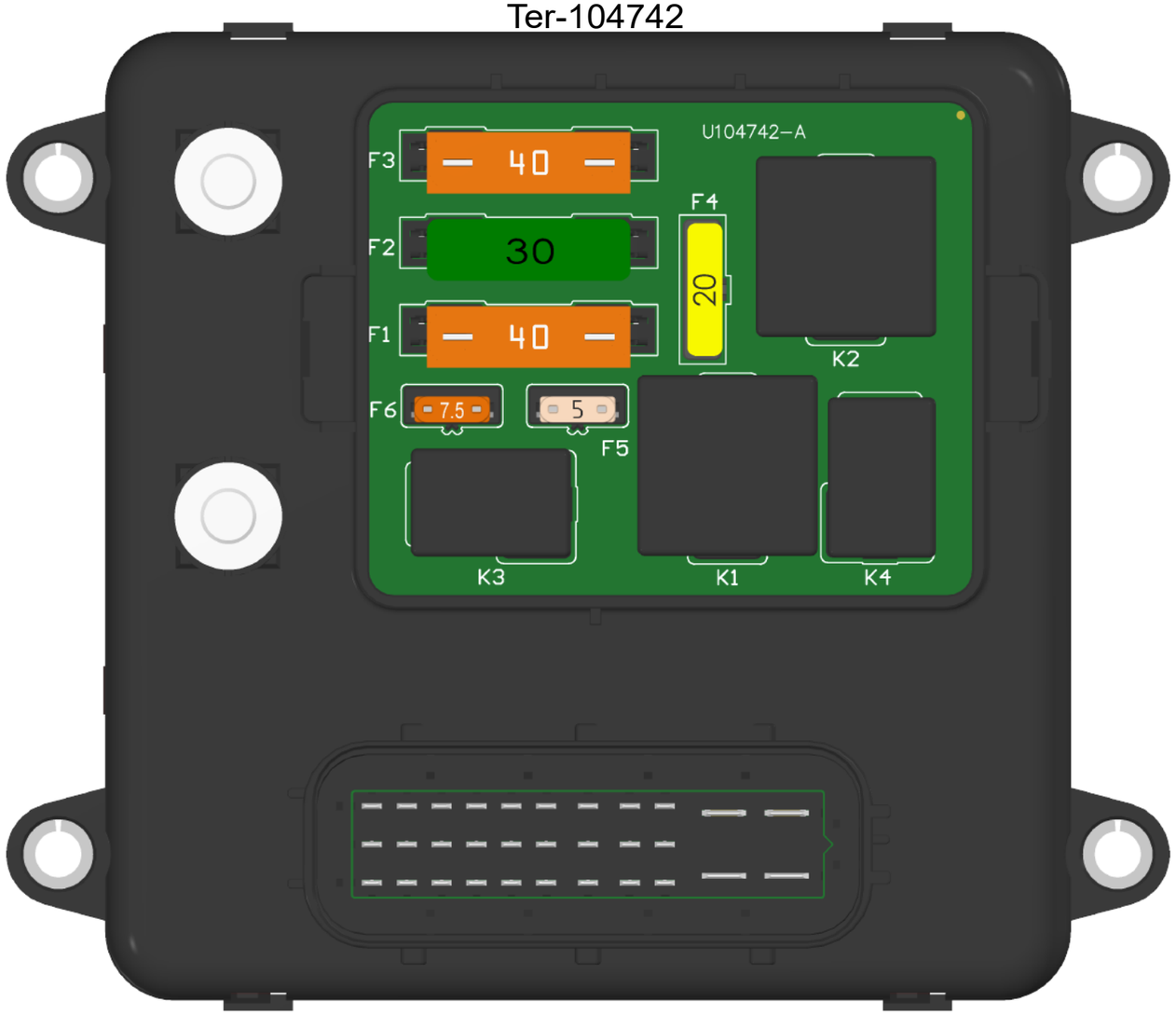

Rev	Note	Rev. date	Approved by

Terri 3 : Circuit Diagram

Drawing nr: 703074

Version	Current edition by	Current edition date
A	CV	2022-11-23

TERRI FOR ALL TERRAIN

Engine Relays & Fuses

Terri
0476-709790
www.terri.se

Approved by	
Approved date	
Designed by	CV
Date	2022-11-23

Sheet	Next	# sheets	Edition
2	10	39	A

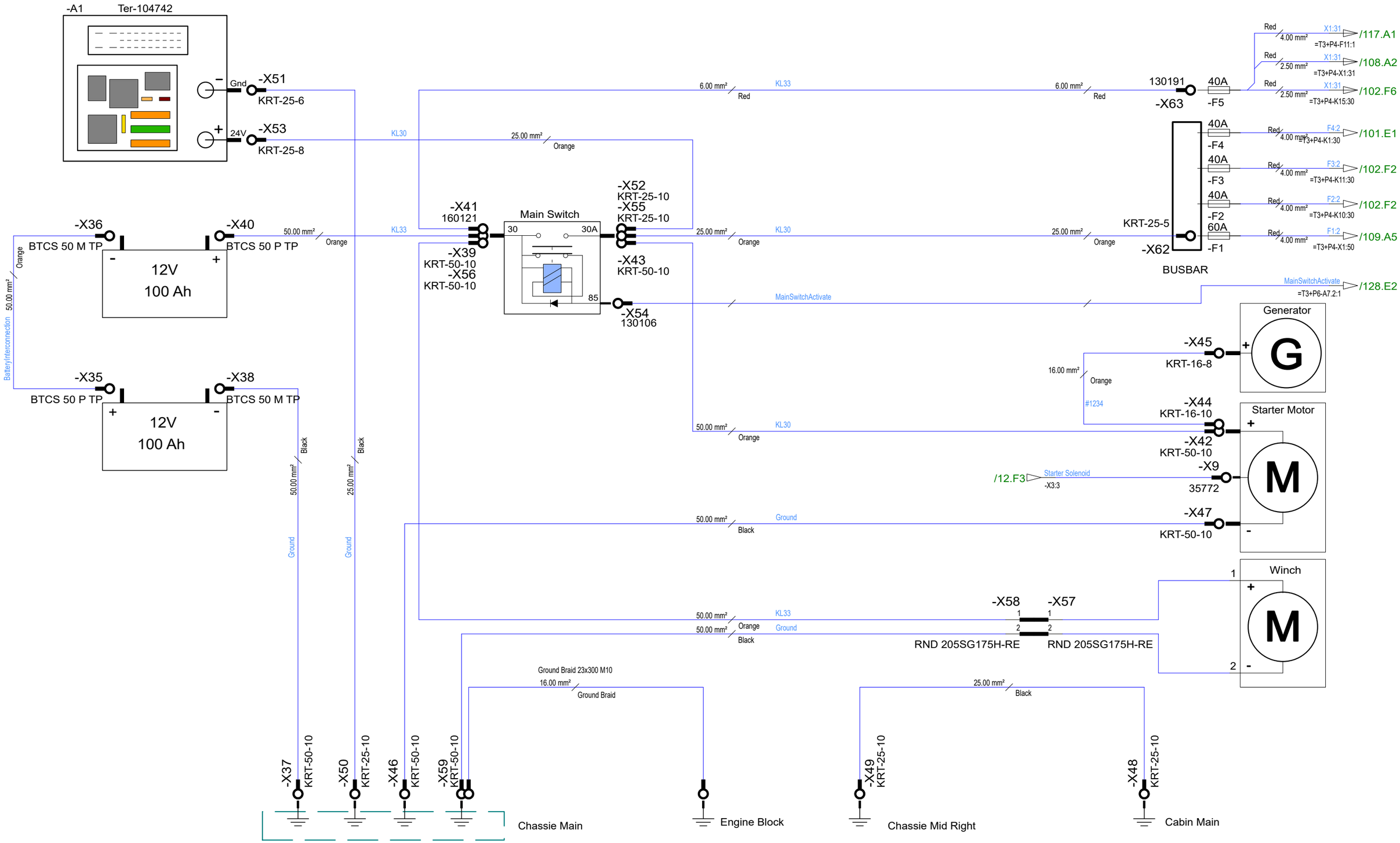

Rev	Note	Rev. date	Approved by

Terri 3 : Circuit Diagram

Drawing nr: 703074

Version	Current edition by	Current edition date
A	CV	2022-11-23

TERRI FOR ALL TERRAIN

Power Supply

CIRCUIT DIAGRAM

Terri
0476-709790
www.terri.se

Approved by	
Approved date	
Designed by	CV
Date	2022-11-23

Sheet	Next	# sheets	Edition
10	11	39	A

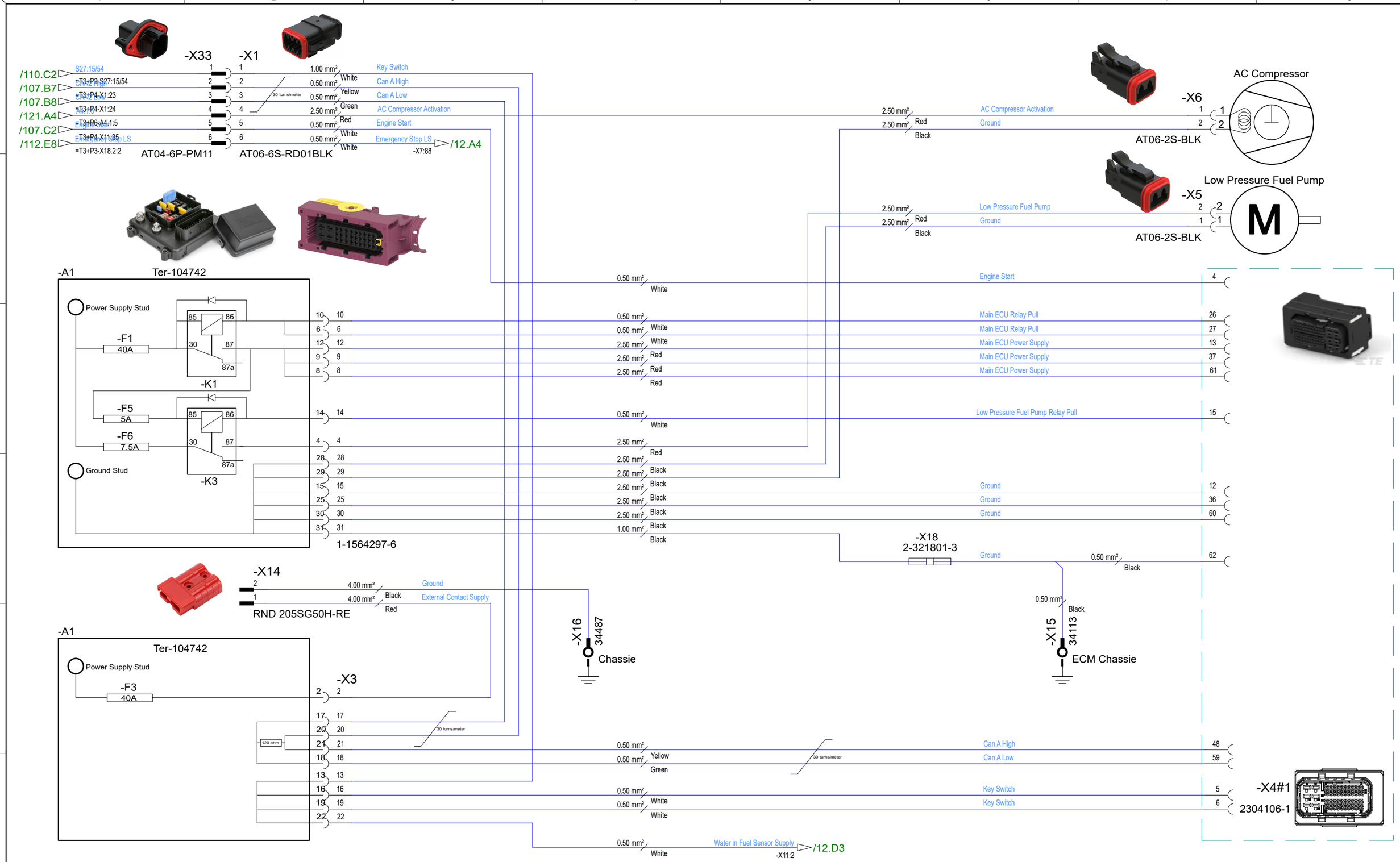

Rev	Note	Rev. date	Approved by

Terri 3 : Circuit Diagram

Drawing nr: 703074

Version	Current edition by	Current edition date
A	CV	2022-11-23

FOR ALL TERRAIN

ECM Power Supply

CIRCUIT DIAGRAM

Terri
0476-709790
www.terri.se

Approved by	
Approved date	
Designed by	CV
Date	2022-11-23

Sheet	Next	# sheets	Edition
11	12	39	A

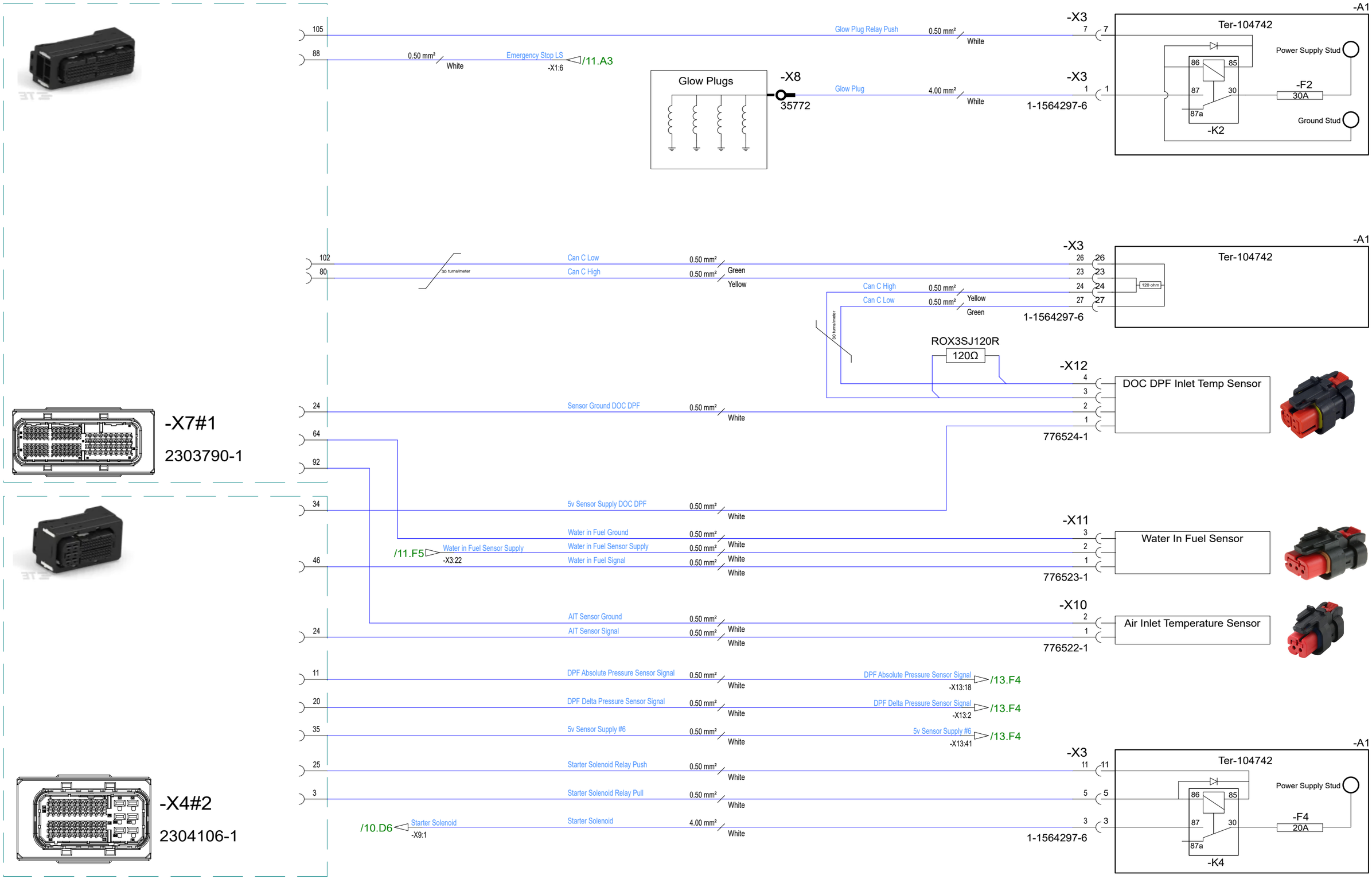

Rev	Note	Rev. date	Approved by

Terri 3 : Circuit Diagram

Drawing nr: 703074

Version	Current edition by	Current edition date
A	CV	2022-11-23

TERRI FOR ALL TERRAIN

ECM Auxiliary

CIRCUIT DIAGRAM

Terri
0476-709790
www.terri.se

Approved by	
Approved date	
Designed by	CV
Date	2022-11-23

Sheet	Next	# sheets	Edition
12	13	39	A

53	30 turns/meter	1.00 mm²		Injector #1 HS	1
31		1.00 mm²	White	Injector #1 LS	34
			White		
78	30 turns/meter	1.00 mm²		Injector #2 HS	4
79		1.00 mm²	White	Injector #2 LS	3
			White		
100	30 turns/meter	1.00 mm²		Injector #3 HS	5
101		1.00 mm²	White	Injector #3 LS	15
			White		
54	30 turns/meter	1.00 mm²		Injector #4 HS	6
32		1.00 mm²	White	Injector #4 LS	7
			White		
94	30 turns/meter	1.00 mm²		Fuel Pump Control Valve HS	40
72		1.00 mm²	White	Fuel Pump Control Valve LS	39
			White		
29	30 turns/meter	1.00 mm²		Throttle Valve HS	43
51		1.00 mm²	White	Throttle Valve LS	42
			White		
73	30 turns/meter	1.00 mm²		NRS Valve HS	25
95		1.00 mm²	White	NRS Valve LS	12
			White		
52	30 turns/meter	1.00 mm²		Wastegate Valve HS	28
30		1.00 mm²	White	Wastegate Valve LS	29
			White		
9	30 turns/meter	0.50 mm²		Fuel Rail Pressure Sensor Signal	32
10		0.50 mm²	White	Fuel Rail Pressure Sensor Return	38
58			White		
84	30 turns/meter	0.50 mm²		Crankshaft Speed Sensor Signal	36
106		0.50 mm²	White	Crankshaft Speed Sensor Return	37
			White		
108	30 turns/meter	0.50 mm²		Camshaft Speed Sensor Signal	21
107		0.50 mm²	White	Camshaft Speed Sensor Return	23
			White		
17		0.50 mm²		Fuel Temperature Sensor	47
63		0.50 mm²	White	Fuel Temperature Sensor Return	16
36		0.50 mm²	White	Fuel Rail Pressure Sensor 5v Supply	26
67		0.50 mm²	White	Crankshaft Speed Sensor Supply	13
44		0.50 mm²	White	Oil Pressure (STG)	22
45		0.50 mm²	White	Oil Pressure Switch Return	17
5		0.50 mm²	White	Coolant Temperature Sensor	9
70		0.50 mm²	White	Sensor Return #1	11
91		0.50 mm²	White	Sensor Return #2	24
38		0.50 mm²	White	Intake MAT Sensor Signal	20
69		0.50 mm²	White	5v Sensor Supply #3	14
1		0.50 mm²	White	Intake MAP Sensor Signal	35
61		0.50 mm²	White	Pre Cooler NRS Temp Sensor Signal	8
62		0.50 mm²	White	Post Cooler NRS Temp Sensor Signal	19
40		0.50 mm²	White	NRS Absolute Pressure Sensor Signal	46
15		0.50 mm²	White	NRS Delta Pressure Sensor Signal	33
90		0.50 mm²	White	Inlet Throttle Valve Return	10
2		0.50 mm²	White	Inlet Throttle Valve Position	45
89		0.50 mm²	White	Sensor Return #6	44
20		0.50 mm²	White	NRS Valve Position	31
41		0.50 mm²	White	5v Sensor Supply #1	27
21		0.50 mm²	White	Turbo Wastegate Valve Position	30
			White		
/12.E6 -X4:11		0.50 mm²		DPF Absolute Pressure Sensor Signal	18
/12.E6 -X4:20		0.50 mm²	White	DPF Delta Pressure Sensor Signal	2
/12.E6 -X4:35		0.50 mm²	White	5v Sensor Supply #6	41
			White		

-X17
2-321801-3

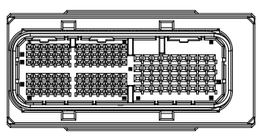

-X7#2

2303790-1

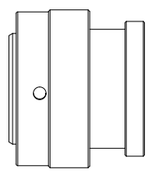

-X13#1

AHDP06-24-47PR-BRA

Rev	Note	Rev. date	Approved by

Terri 3 : Circuit Diagram

Drawing nr: 703074

Version	Current edition by	Current edition date
A	CV	2022-11-23

TERRI FOR ALL TERRAIN

ECM Engine Interface

CIRCUIT DIAGRAM

Terri
0476-709790
www.terri.se

Approved by	
Approved date	
Designed by	CV
Date	2022-11-23

Sheet	Next	# sheets	Edition
13	14	39	A

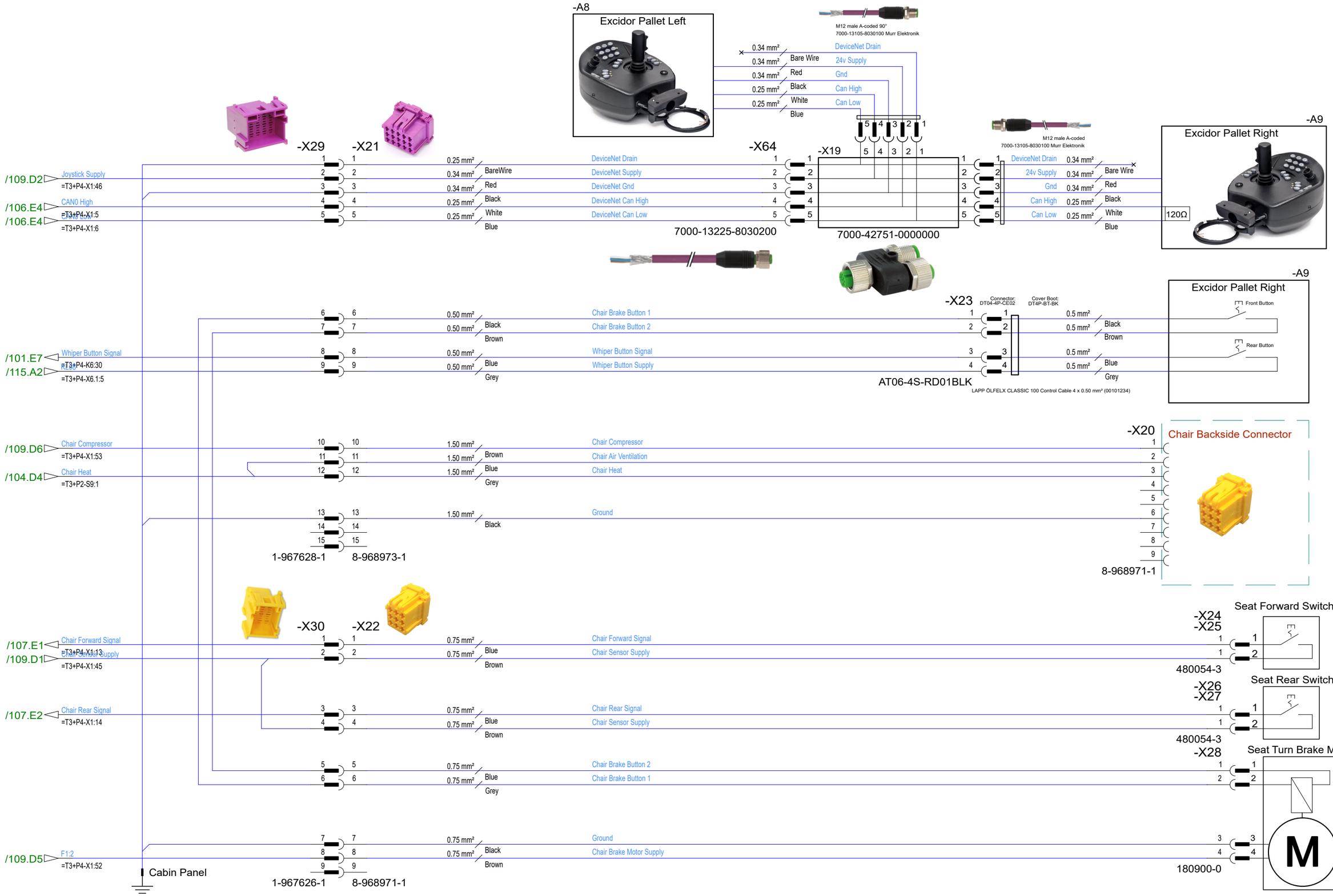

Rev	Note	Rev. date	Approved by

Terri 3 : Circuit Diagram

Drawing nr: 703074

Version	Current edition by	Current edition date
A	CV	2022-11-23

TERRI FOR ALL TERRAIN

Chair

CIRCUIT DIAGRAM

Terri
0476-709790
www.terri.se

Approved by	
Approved date	
Designed by	CV
Date	2022-11-23

Sheet	Next	# sheets	Edition
14	15	39	A

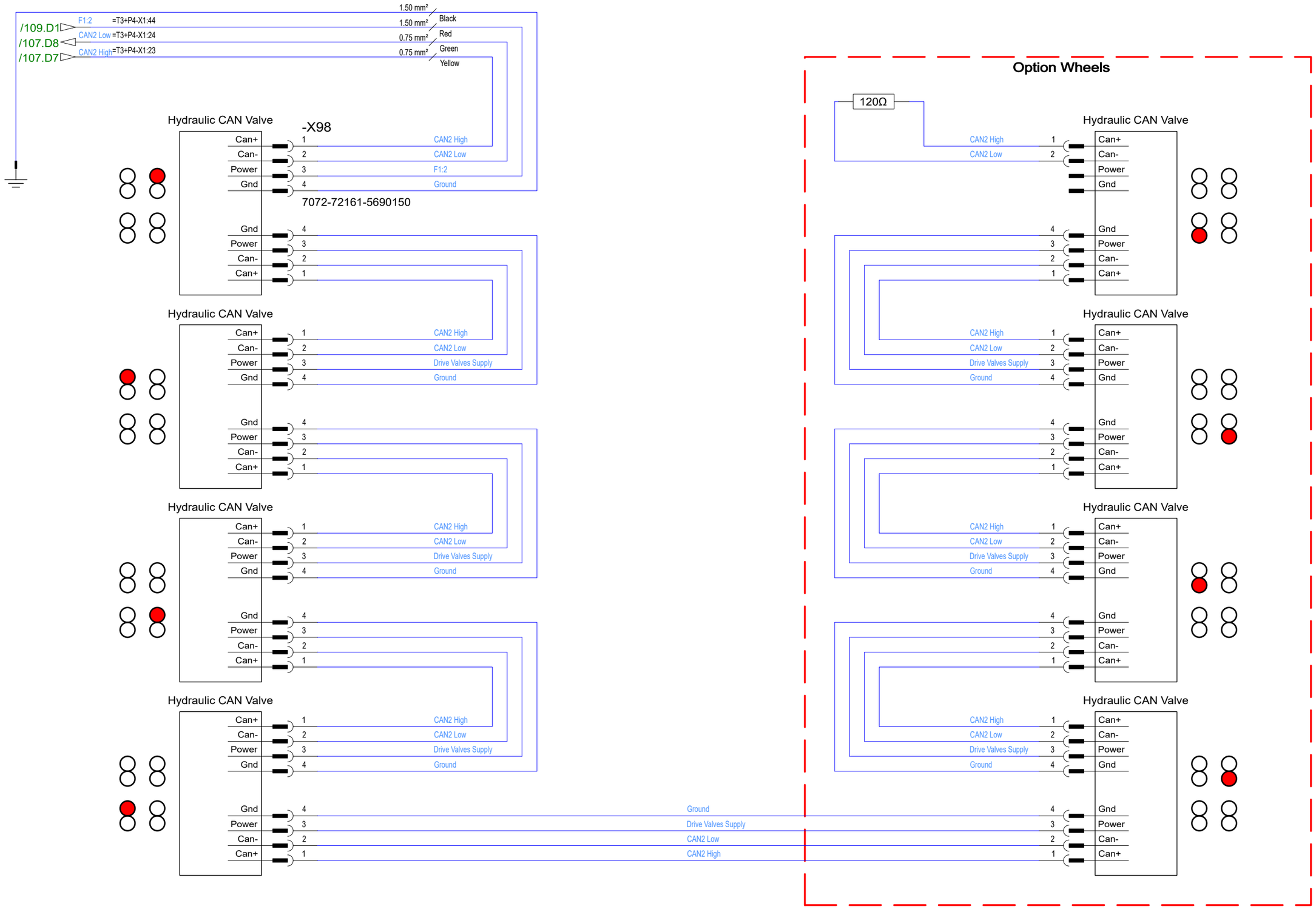

Rev	Note	Rev. date	Approved by

Terri 3 : Circuit Diagram

Drawing nr: 703074

Version	Current edition by	Current edition date
A	CV	2022-11-23

TERRI FOR ALL TERRAIN

Drive Valves

CIRCUIT DIAGRAM

Terri
0476-709790
www.terri.se

Approved by	
Approved date	
Designed by	CV
Date	2022-11-23

Sheet	Next	# sheets	Edition
15	16	39	A

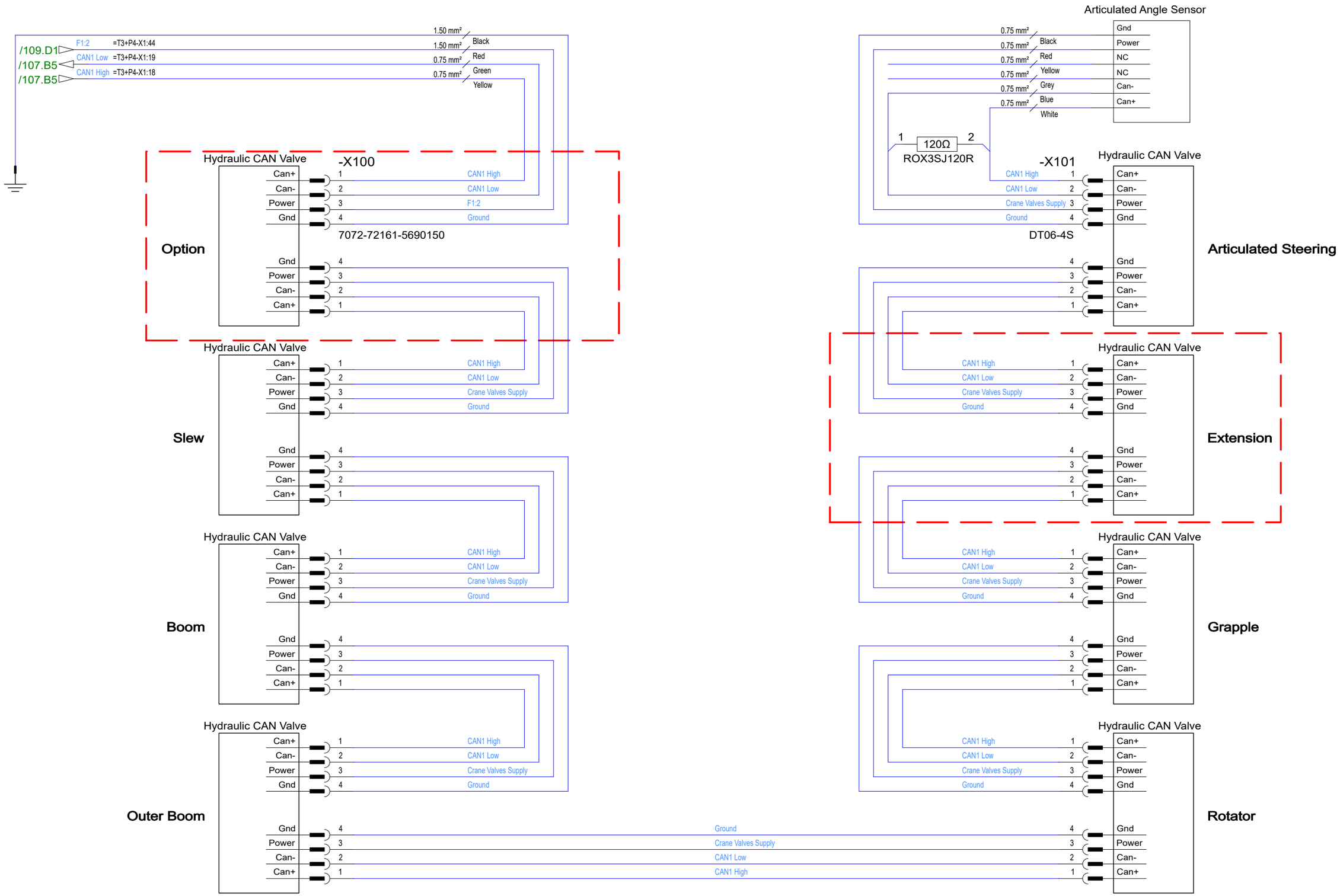

Rev	Note	Rev. date	Approved by

Pump Pressure

Terri 3 : Circuit Diagram

Drawing nr: 703074

Version	Current edition by	Current edition date
A	CV	2022-11-23

TERRI FOR ALL TERRAIN

Crane Valves

CIRCUIT DIAGRAM

Terri
0476-709790
www.terri.se

Approved by	
Approved date	
Designed by	CV
Date	2022-11-23

Sheet	Next	# sheets	Edition
16	101	39	A

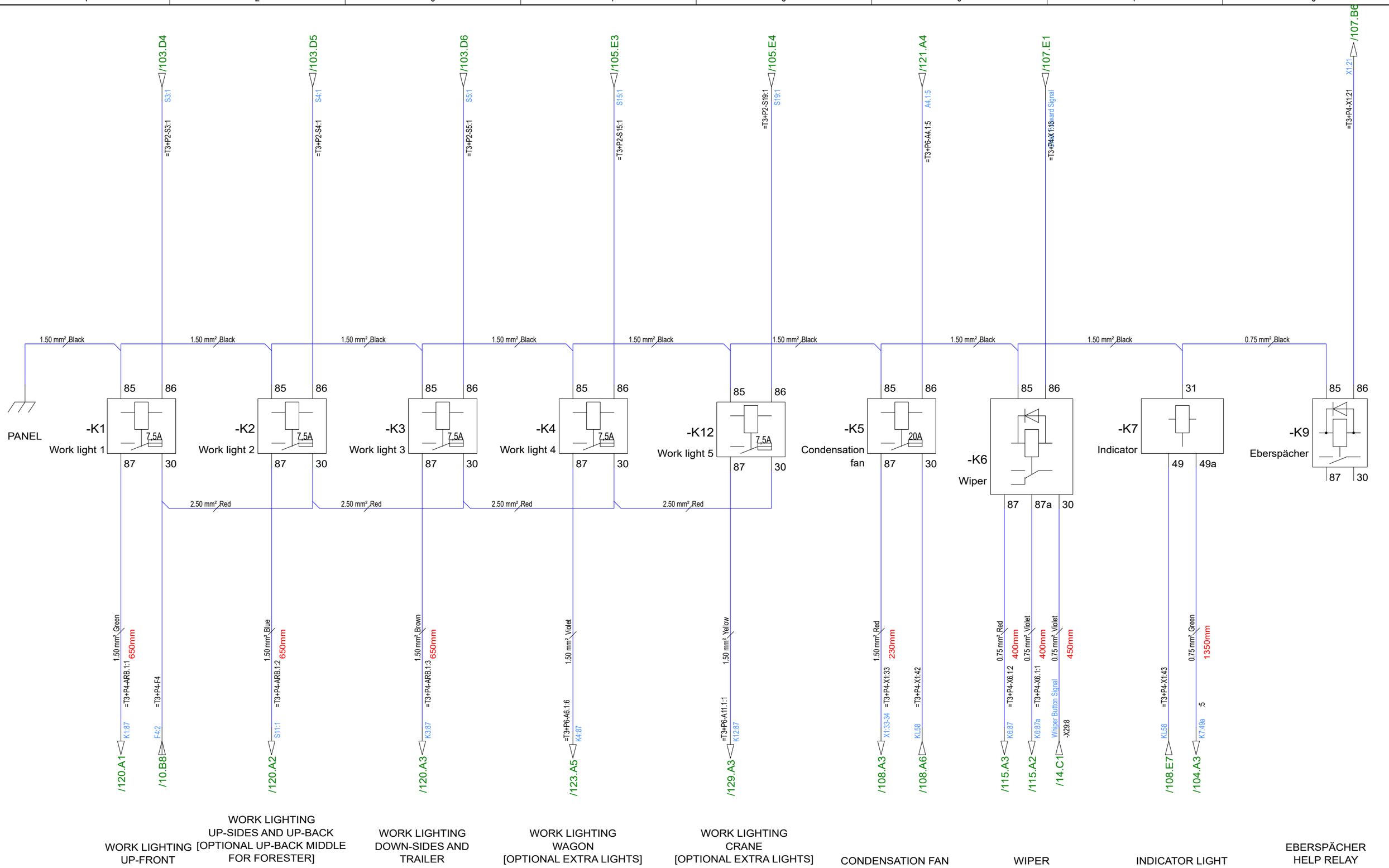

Rev	Note	Rev. date	Approved by

Terri 3 : Circuit Diagram

Drawing nr: 703074

Version	Current edition by	Current edition date
A	CV	2022-11-23

TERRI FOR ALL TERRAIN

Relays K1-K9

CIRCUIT DIAGRAM

Terri
0476-709790
www.terri.se

Approved by	
Approved date	
Designed by	CV
Date	2022-11-23

Sheet	Next	# sheets	Edition
101	102	39	A

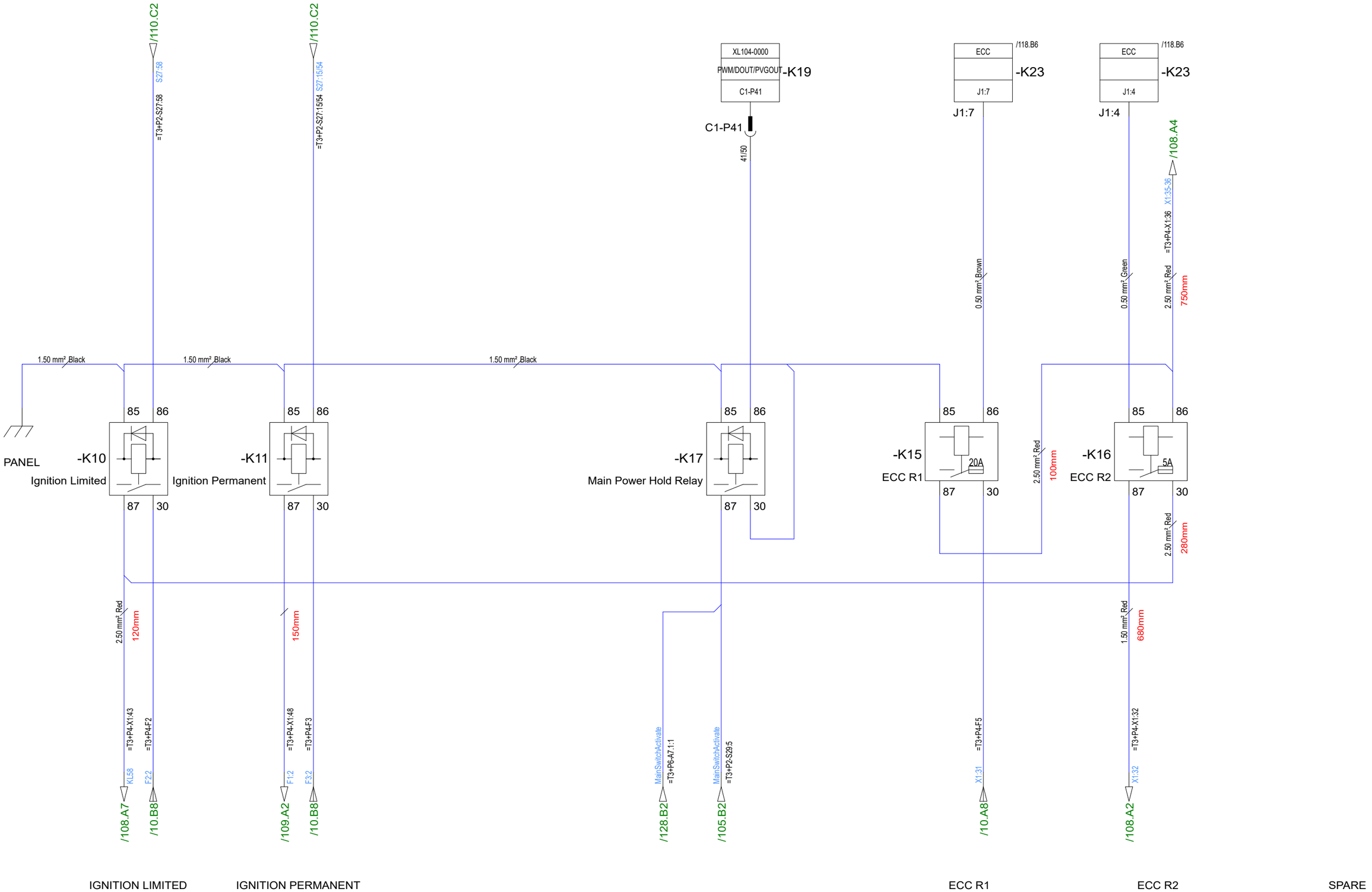

Rev	Note	Rev. date	Approved by

Terri 3 : Circuit Diagram

Drawing nr: 703074

Version	Current edition by	Current edition date
A	CV	2022-11-23

TERRI FOR ALL TERRAIN

Relays K10-K16

CIRCUIT DIAGRAM

Terri
0476-709790
www.terri.se

Approved by	
Approved date	
Designed by	CV
Date	2022-11-23

Sheet	Next	# sheets	Edition
102	103	39	A

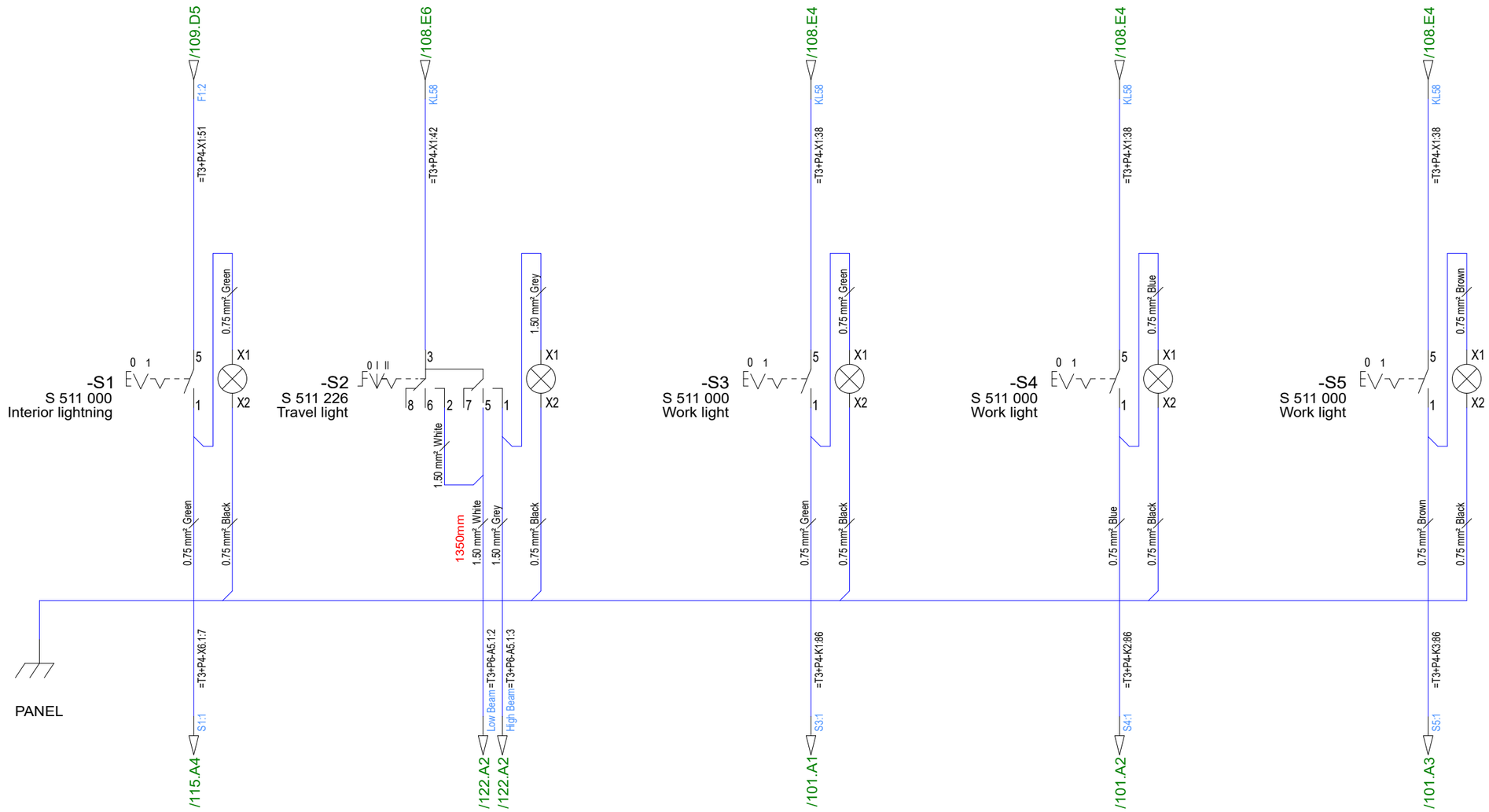

INTERIOR LIGHTNING

TRAVEL LIGHT

WORK LIGHTING
FRONT AND BACK

WORK LIGHTING
SIDES AND
[OPTIONAL BACK]

WORK LIGHTING
CAB SIDE DOWN AND
SIDES

SPARE

Rev	Note	Rev. date	Approved by

Terri 3 : Circuit Diagram

Drawing nr: 703074

Version	Current edition by	Current edition date
A	CV	2022-11-23

TERRI
FOR ALL TERRAIN

Switches S1-S5

CIRCUIT DIAGRAM

Terri
0476-709790
www.terri.se

Approved by	
Approved date	
Designed by	CV
Date	2022-11-23

Sheet	Next	# sheets	Edition
103	104	39	A

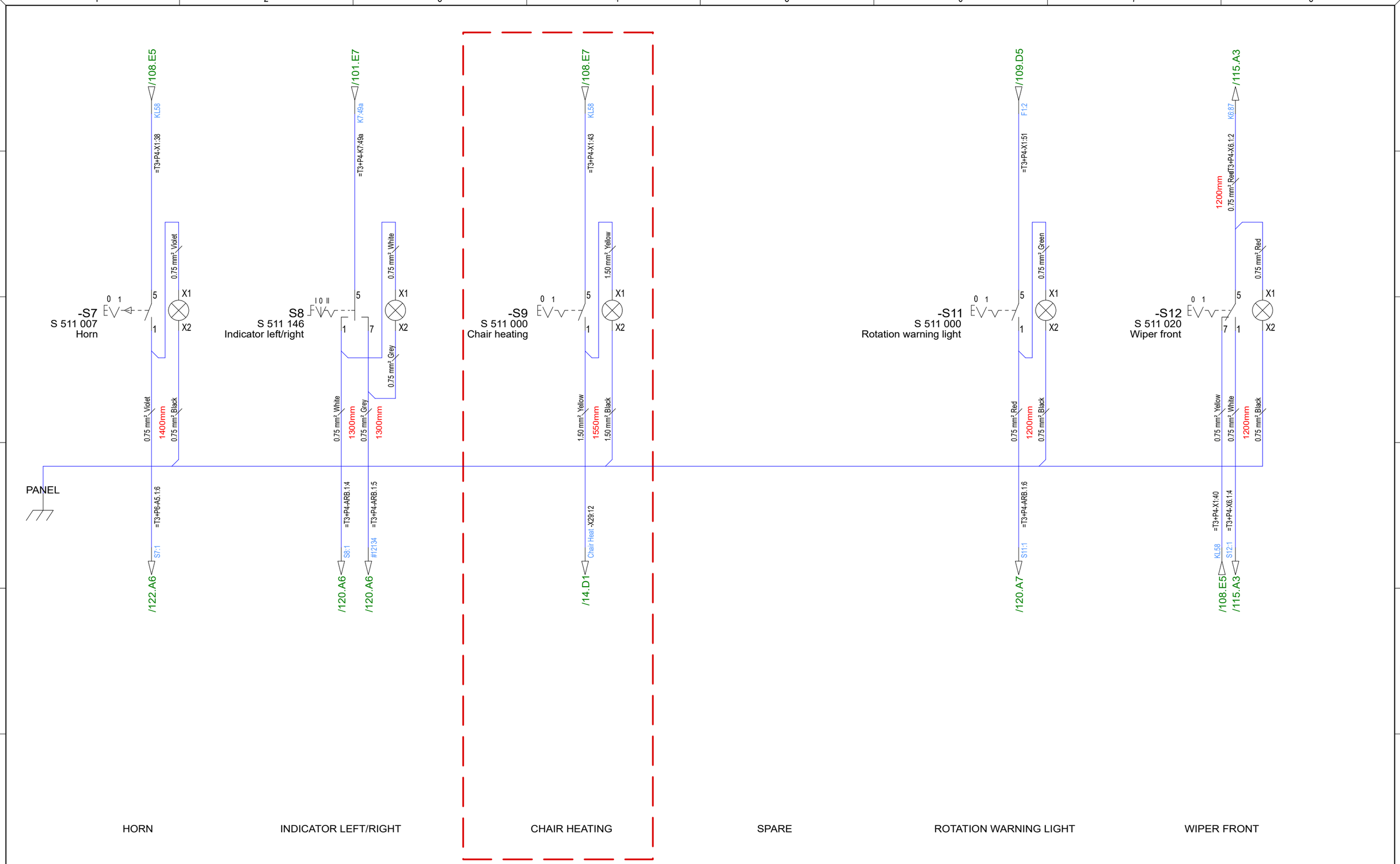

Rev	Note	Rev. date	Approved by

Terri 3 : Circuit Diagram

Drawing nr: 703074

Version	Current edition by	Current edition date
A	CV	2022-11-23

TERRI FOR ALL TERRAIN

Switches S7-S12

CIRCUIT DIAGRAM

Terri
0476-709790
www.terri.se

Approved by	
Approved date	
Designed by	CV
Date	2022-11-23

Sheet	Next	# sheets	Edition
104	105	39	A

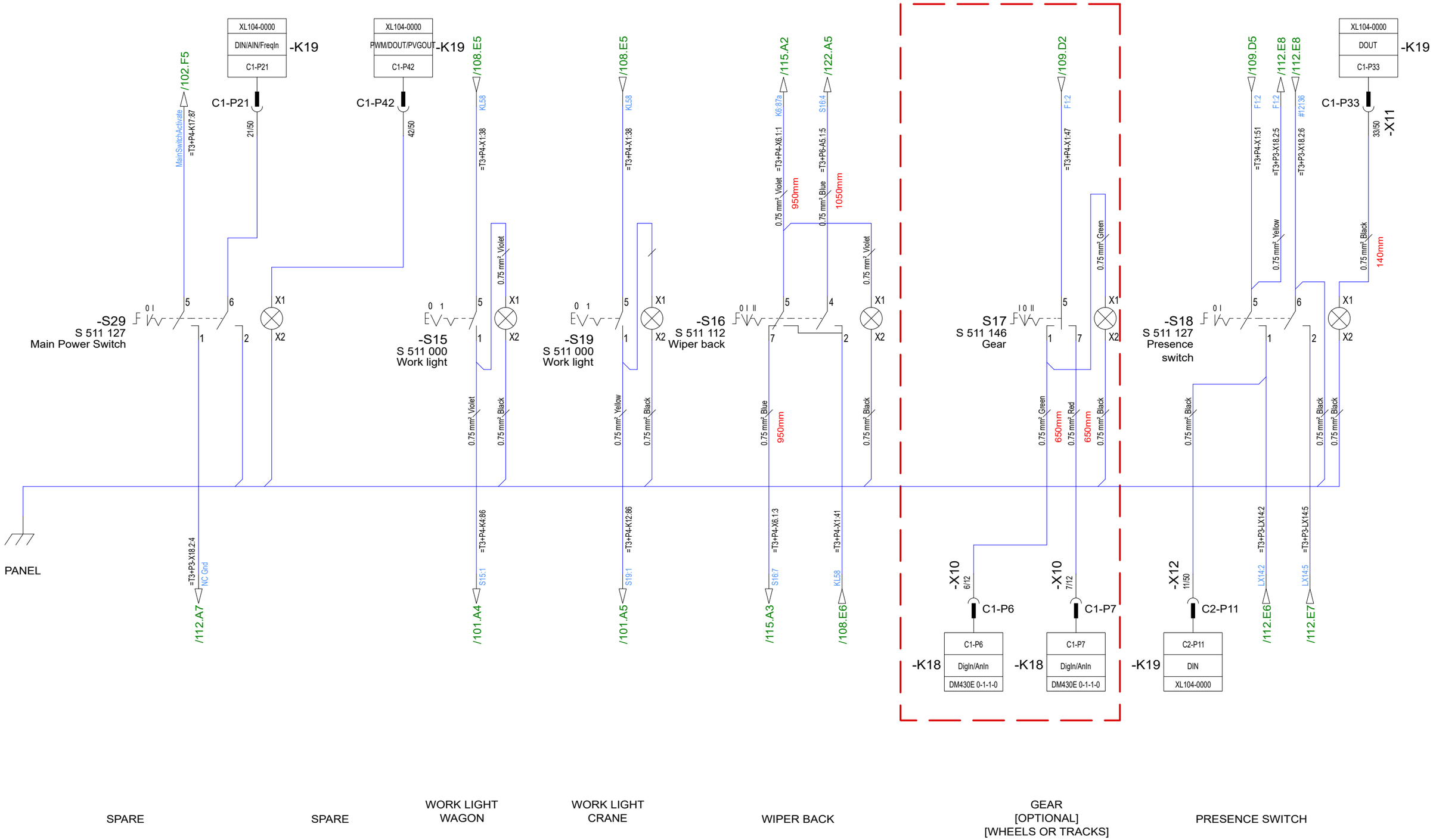

Rev	Note	Rev. date	Approved by

Terri 3 : Circuit Diagram

Drawing nr: 703074

Version	Current edition by	Current edition date
A	CV	2022-11-23

TERRI FOR ALL TERRAIN

Switches S15-S18

CIRCUIT DIAGRAM

Terri
0476-709790
www.terri.se

Approved by	
Approved date	
Designed by	CV
Date	2022-11-23

Sheet	Next	# sheets	Edition
105	106	39	A

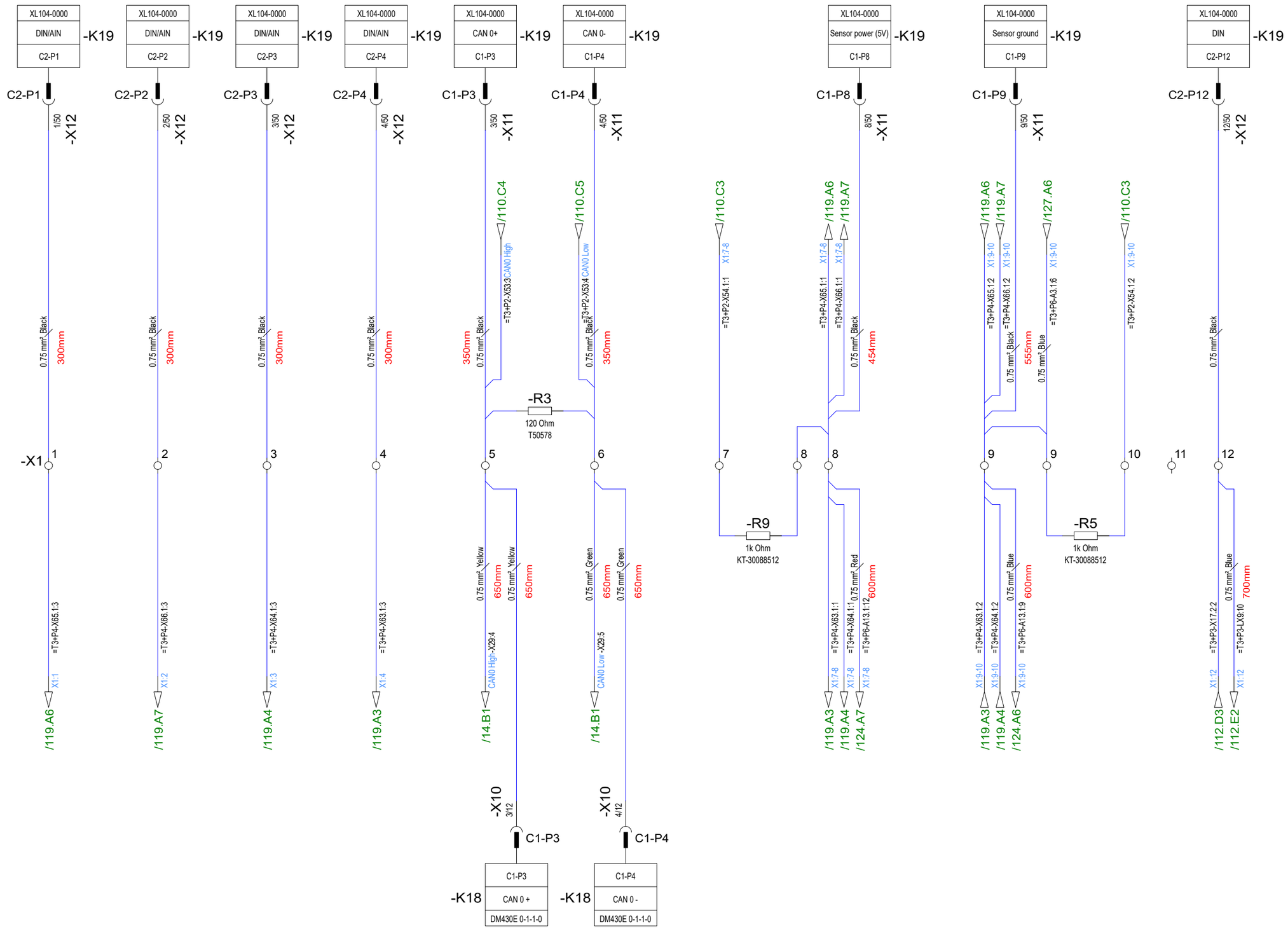

Rev	Note	Rev. date	Approved by

Terri 3 : Circuit Diagram

Drawing nr: 703074

Version	Current edition by	Current edition date
A	CV	2022-11-23

TERRI FOR ALL TERRAIN

X1 Terminal 1-12

CIRCUIT DIAGRAM

Terri
0476-709790
www.terri.se

Approved by	
Approved date	
Designed by	CV
Date	2022-11-23

Sheet	Next	# sheets	Edition
106	107	39	A

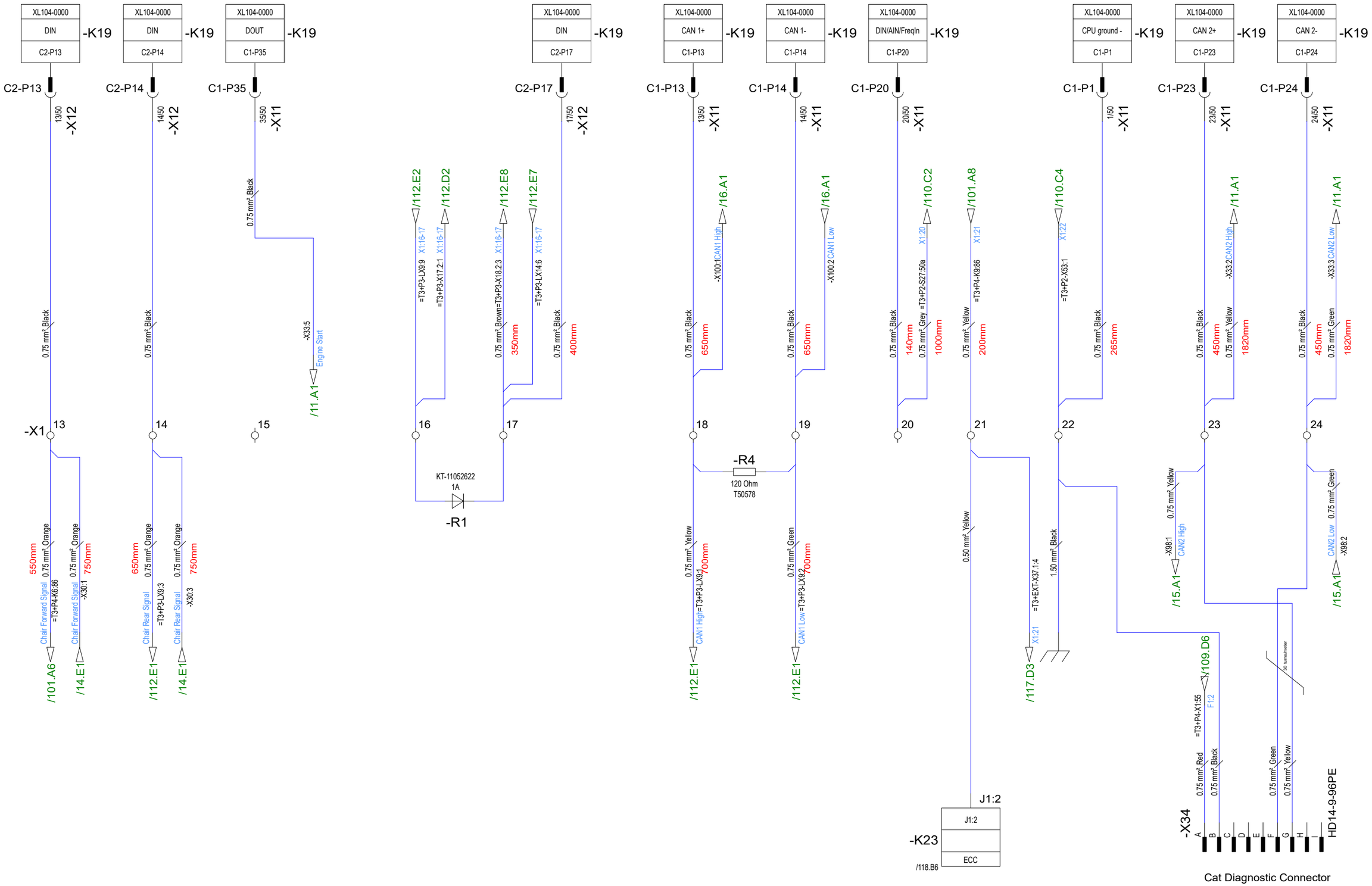

Rev	Note	Rev. date	Approved by

Terri 3 : Circuit Diagram

Drawing nr: 703074

Version	Current edition by	Current edition date
A	CV	2022-11-23

TERRI FOR ALL TERRAIN

X1 Terminal 13-24

CIRCUIT DIAGRAM

Terri
0476-709790
www.terri.se

Approved by	
Approved date	
Designed by	CV
Date	2022-11-23

Sheet	Next	# sheets	Edition
107	108	39	A

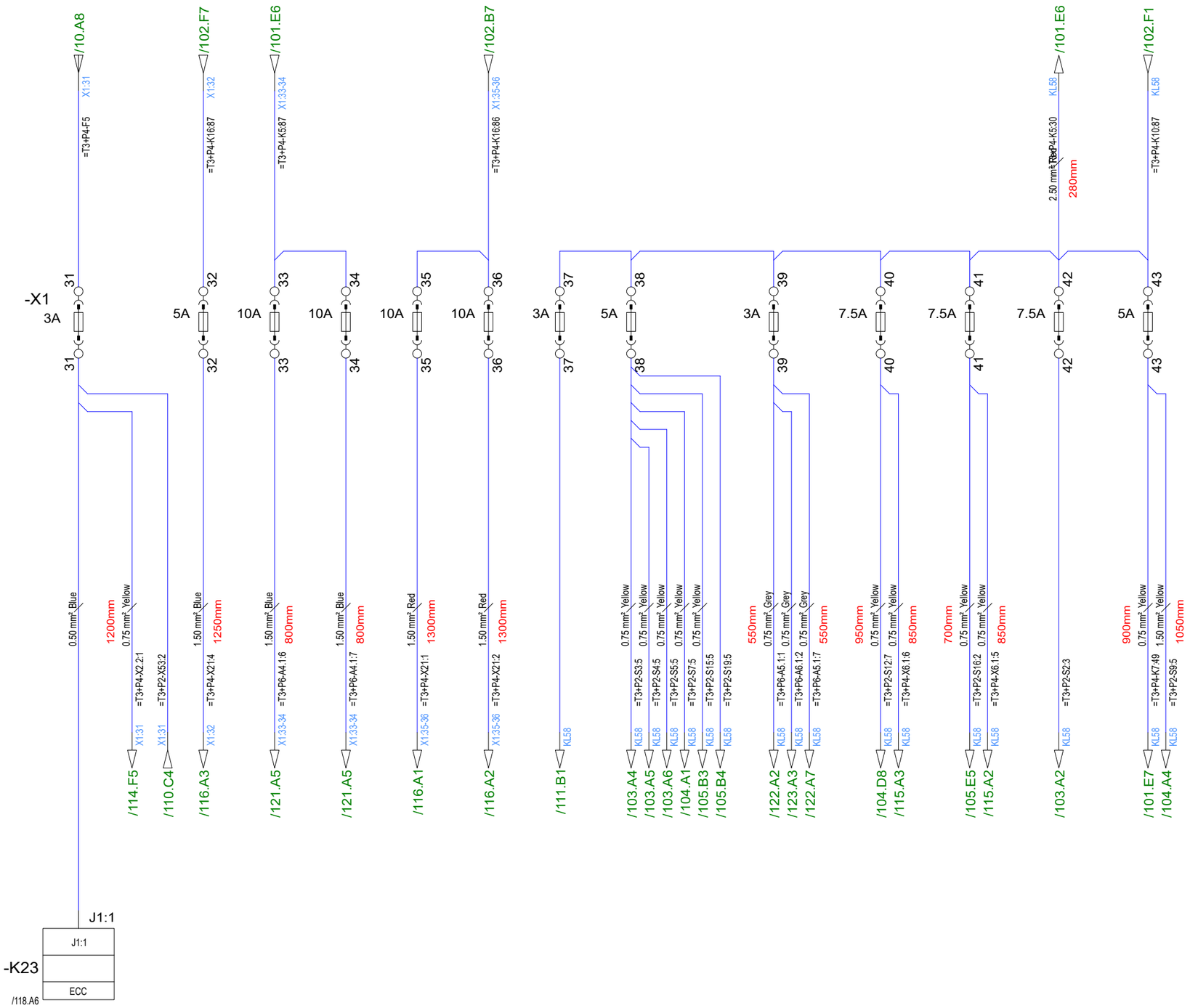

Rev	Note	Rev. date	Approved by

Terri 3 : Circuit Diagram

Drawing nr:703074

Version	Current edition by	Current edition date
A	CV	2022-11-23

TERRI FOR ALL TERRAIN

X1 Fuses 31-43

CIRCUIT DIAGRAM

Terri
0476-709790
www.terri.se

Approved by	
Approved date	
Designed by	CV
Date	2022-11-23

Sheet	Next	# sheets	Edition
108	109	39	A

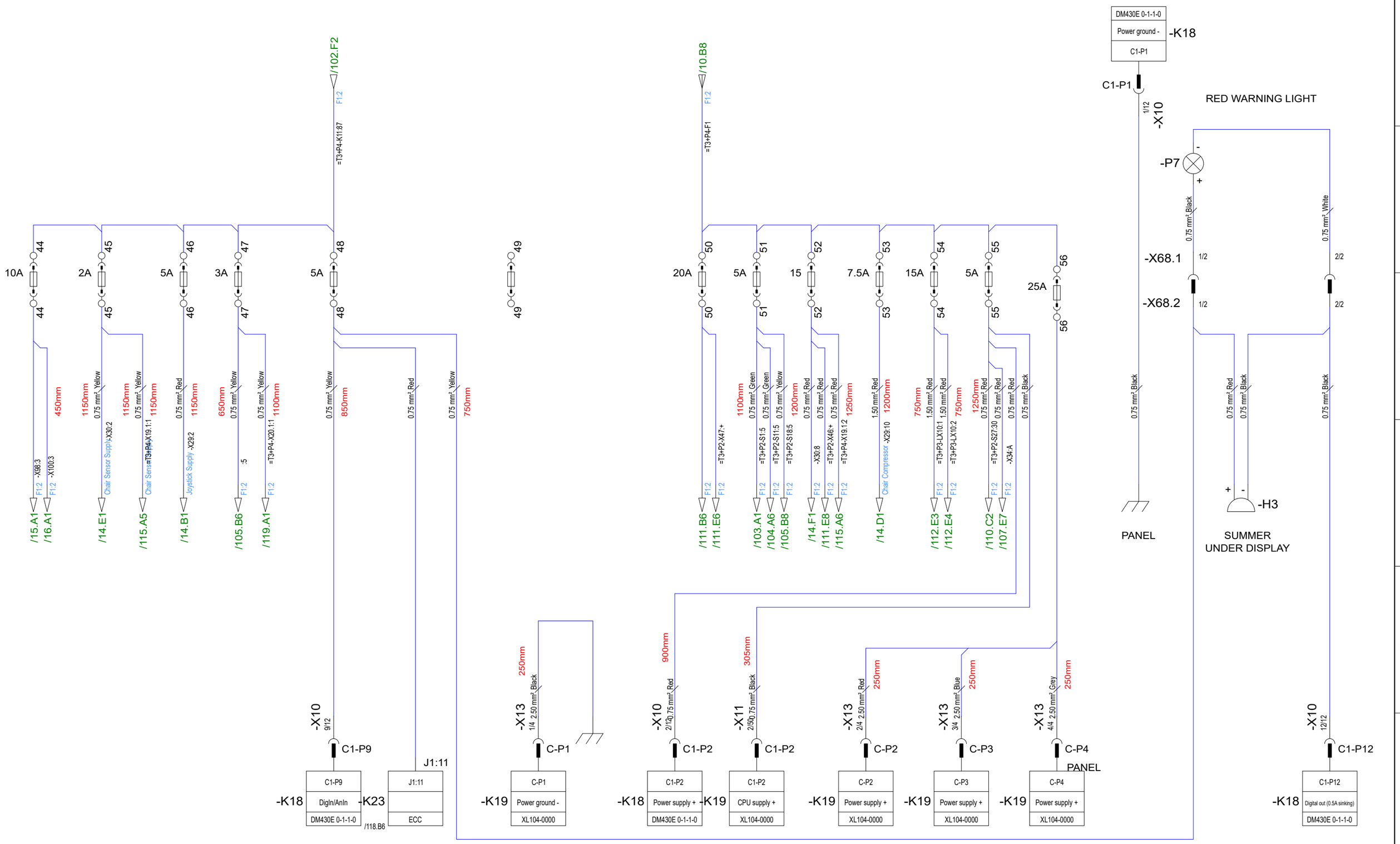

Rev	Note	Rev. date	Approved by

Terri 3 : Circuit Diagram

Drawing nr: 703074

Version	Current edition by	Current edition date
A	CV	2022-11-23

TERRI FOR ALL TERRAIN

X1 Fuses 44-55

CIRCUIT DIAGRAM

Terri
0476-709790
www.terri.se

Approved by	
Approved date	
Designed by	CV
Date	2022-11-23

Sheet	Next	# sheets	Edition
109	110	39	A

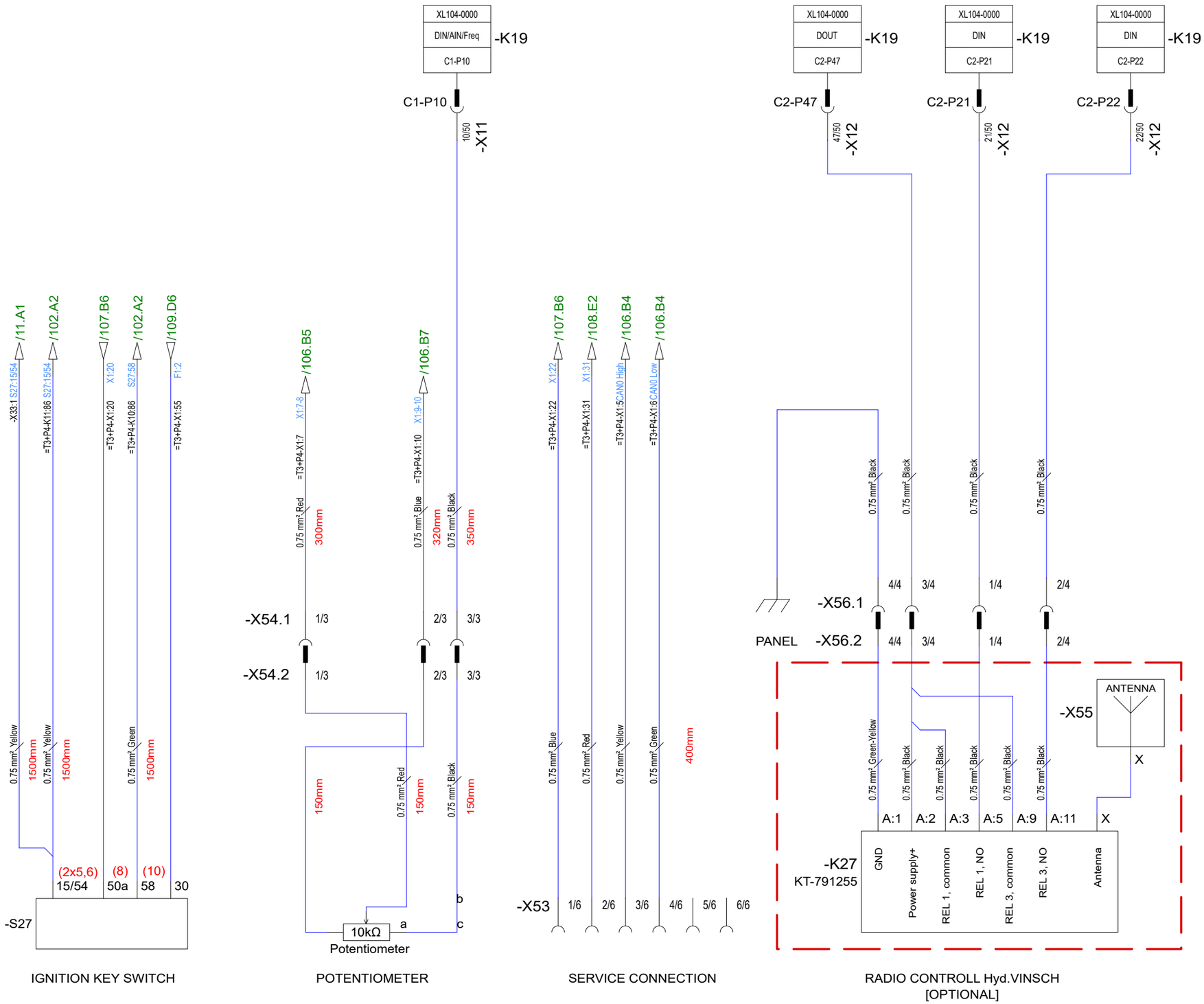

Rev	Note	Rev. date	Approved by

Terri 3 : Circuit Diagram

Drawing nr: 703074

Version	Current edition by	Current edition date
A	CV	2022-11-23

TERRI FOR ALL TERRAIN

Extras

CIRCUIT DIAGRAM

Terri
0476-709790
www.terri.se

Approved by	
Approved date	
Designed by	CV
Date	2022-11-23

Sheet	Next	# sheets	Edition
110	111	39	A

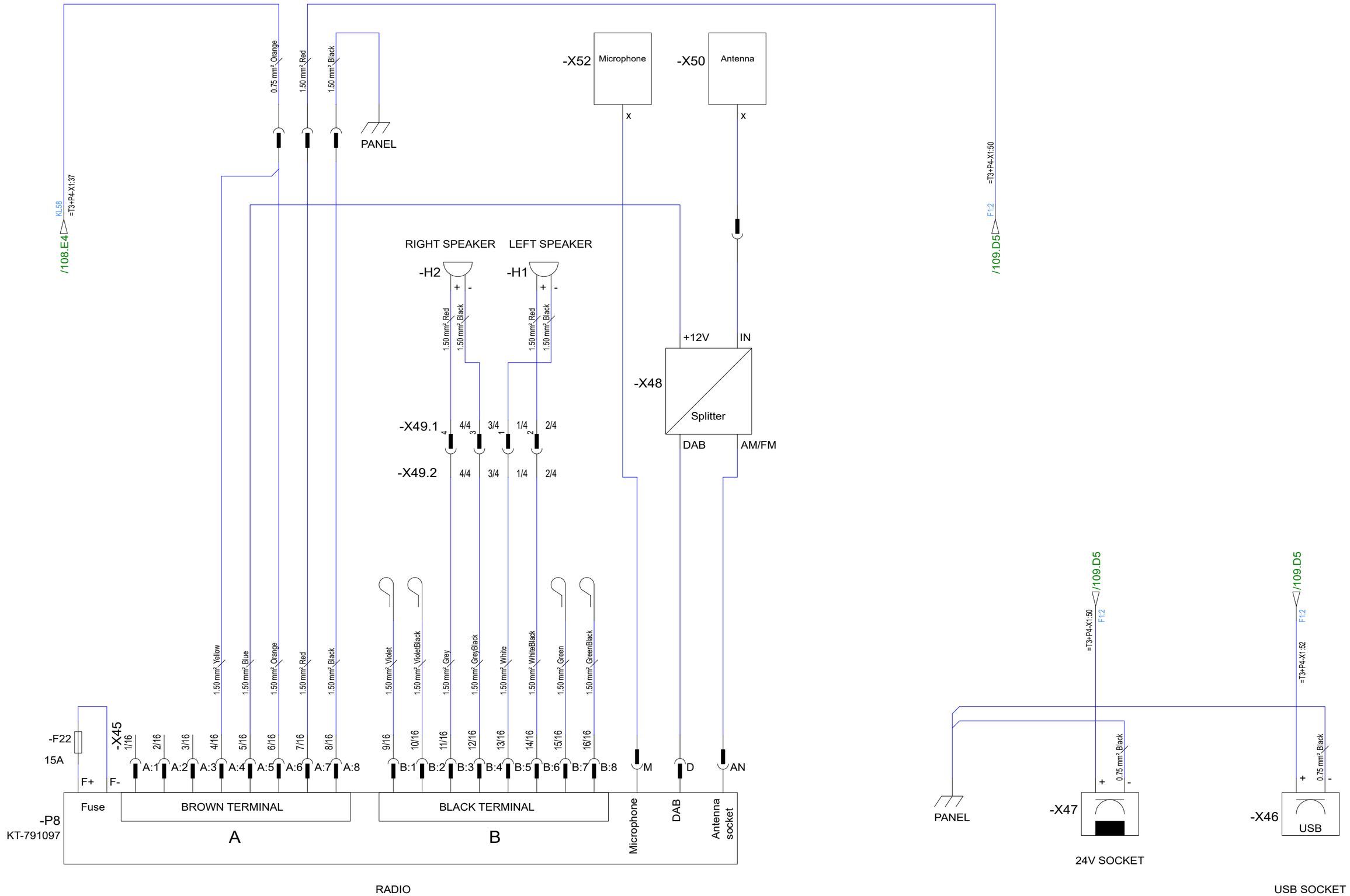

Rev	Note	Rev. date	Approved by

Terri 3 : Circuit Diagram

Drawing nr: 703074

Version	Current edition by	Current edition date
A	CV	2022-11-23

TERRI FOR ALL TERRAIN

Radio

CIRCUIT DIAGRAM

Terri
0476-709790
www.terri.se

Approved by	
Approved date	
Designed by	CV
Date	2022-11-23

Sheet	Next	# sheets	Edition
111	112	39	A

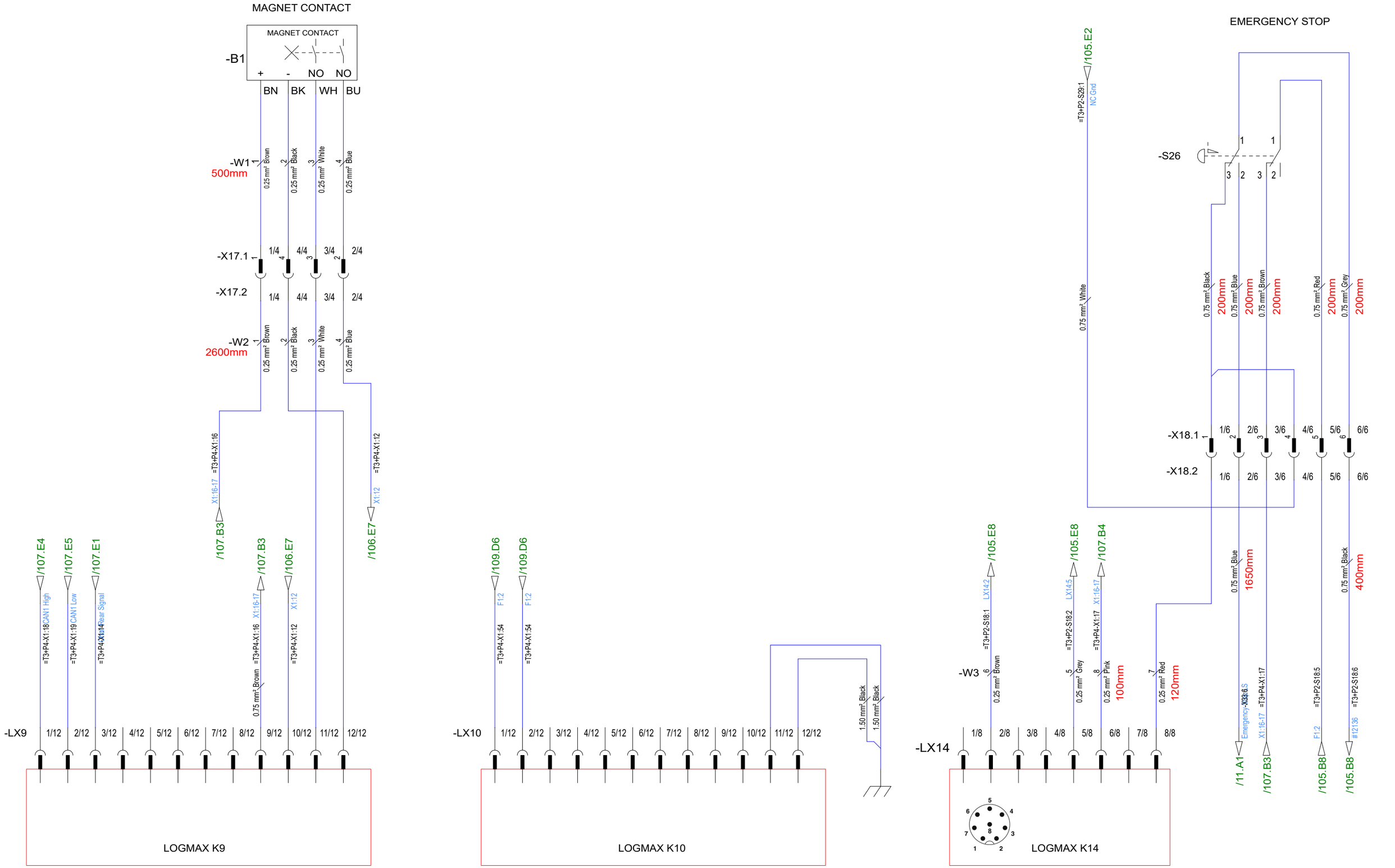

Rev	Note	Rev. date	Approved by

Terri 3 : Circuit Diagram

Drawing nr: 703074

Version	Current edition by	Current edition date
A	CV	2022-11-23

TERRI FOR ALL TERRAIN

LogMax K9,K10,K14

CIRCUIT DIAGRAM

Terri
0476-709790
www.terri.se

Approved by	
Approved date	
Designed by	CV
Date	2022-11-23

Sheet	Next	# sheets	Edition
112	113	39	A

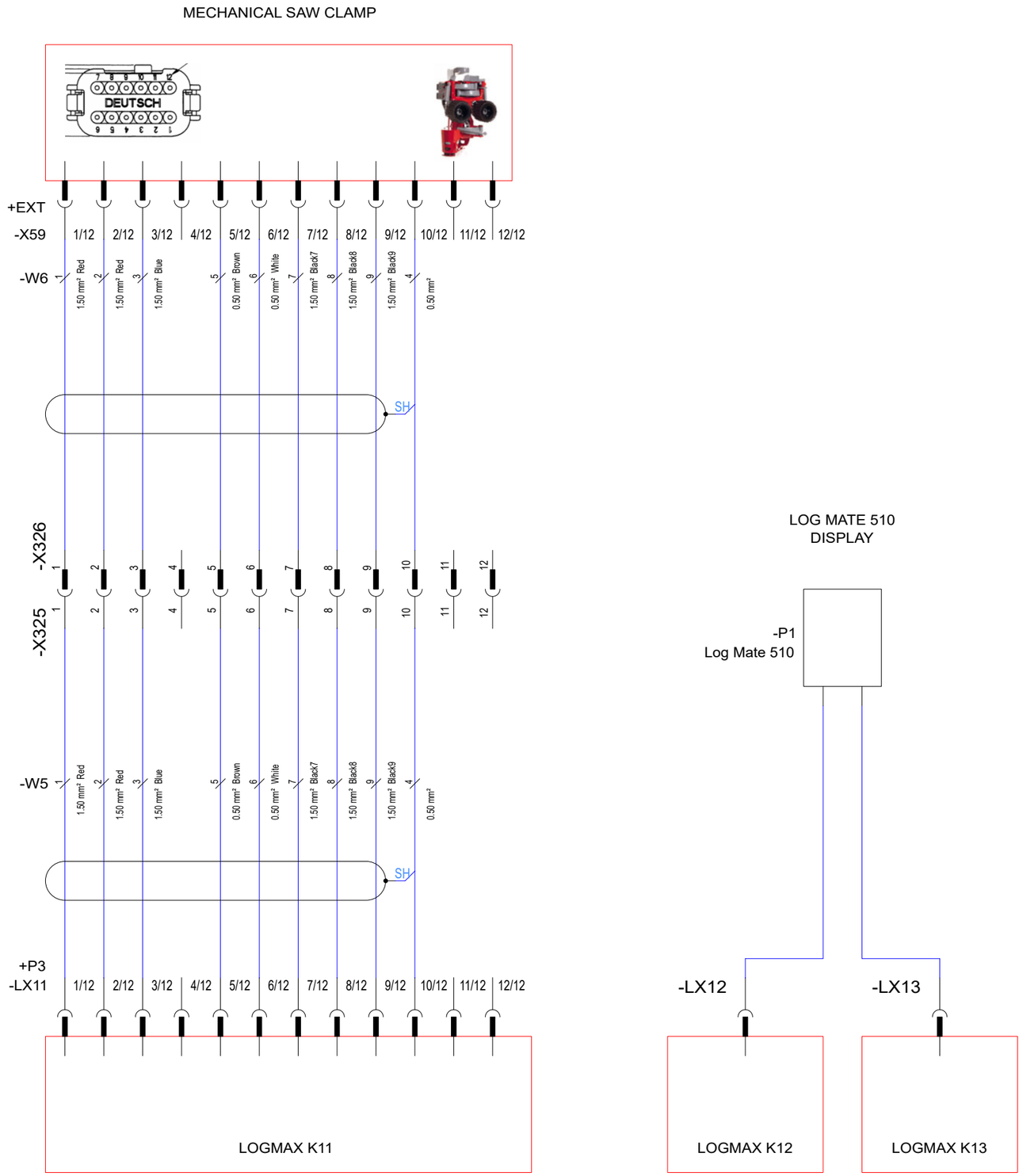

Rev	Note	Rev. date	Approved by

Terri 3 : Circuit Diagram

Drawing nr: 703074

Version	Current edition by	Current edition date
A	CV	2022-11-23

TERRI FOR ALL TERRAIN

LogMax K11,K12,K13

CIRCUIT DIAGRAM

Terri
0476-709790
www.terri.se

Approved by	
Approved date	
Designed by	CV
Date	2022-11-23

Sheet	Next	# sheets	Edition
113	114	39	A

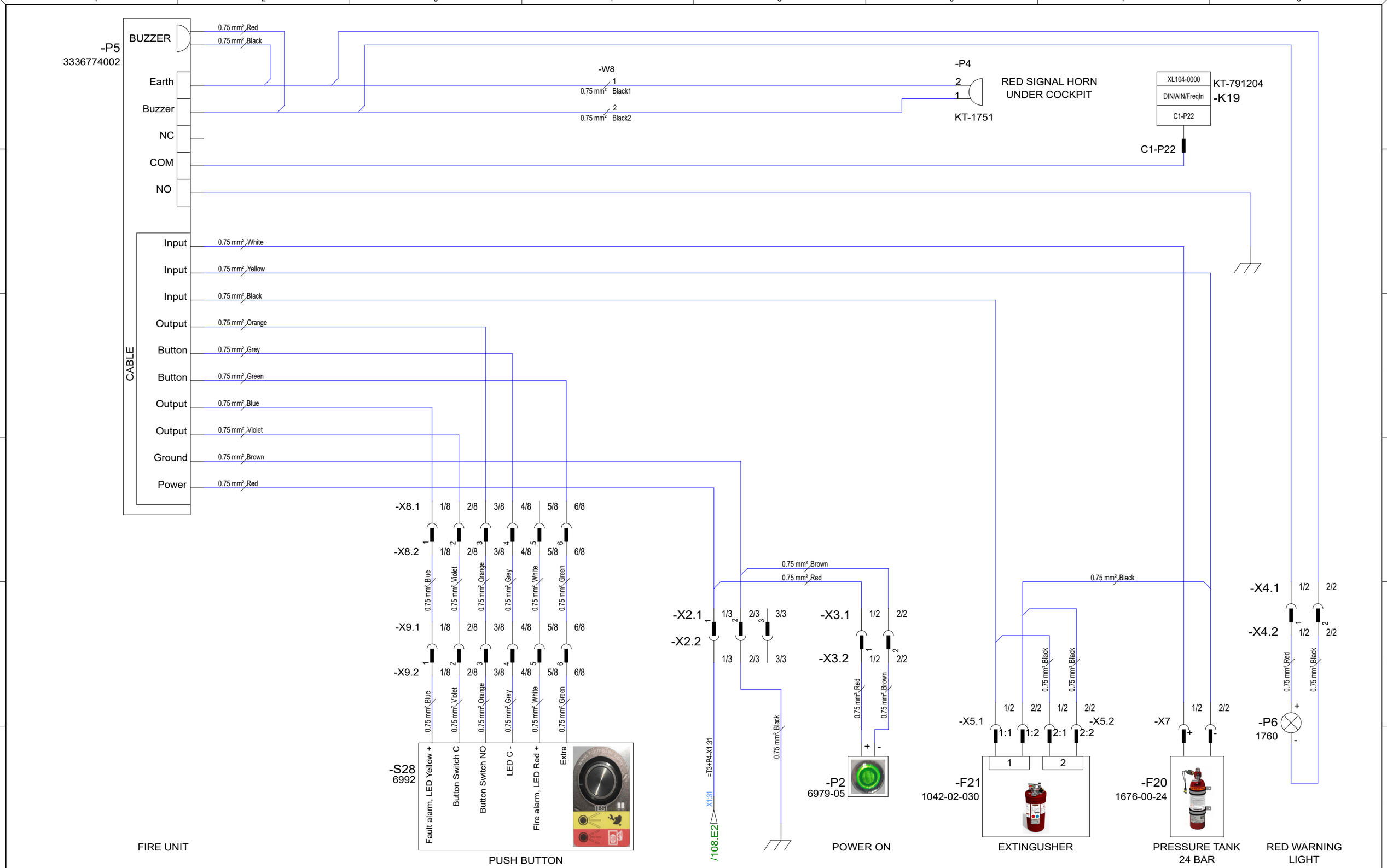

Rev	Note	Rev. date	Approved by

Terri 3 : Circuit Diagram

Drawing nr: 703074

Version	Current edition by	Current edition date
A	CV	2022-11-23

TERRI FOR ALL TERRAIN

FogMaker

CIRCUIT DIAGRAM

Terri
0476-709790
www.terri.se

Approved by	
Approved date	
Designed by	CV
Date	2022-11-23

Sheet	Next	# sheets	Edition
114	115	39	A

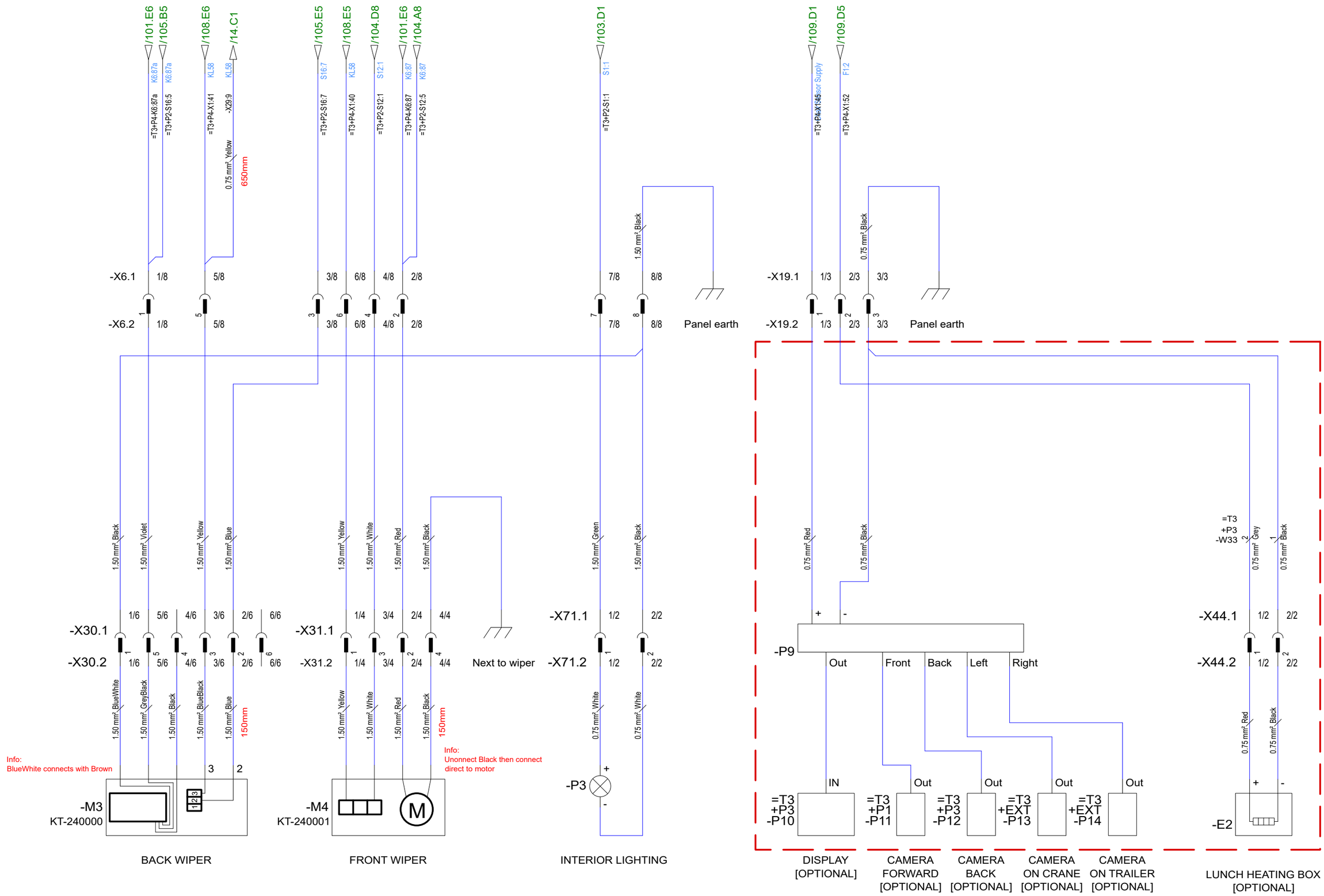

Rev	Note	Rev. date	Approved by

Terri 3 : Circuit Diagram

Drawing nr: 703074

Version	Current edition by	Current edition date
A	CV	2022-11-23

TERRI FOR ALL TERRAIN

Whiper and Cameras

CIRCUIT DIAGRAM

Terri
0476-709790
www.terri.se

Approved by	
Approved date	
Designed by	CV
Date	2022-11-23

Sheet	Next	# sheets	Edition
115	116	39	A

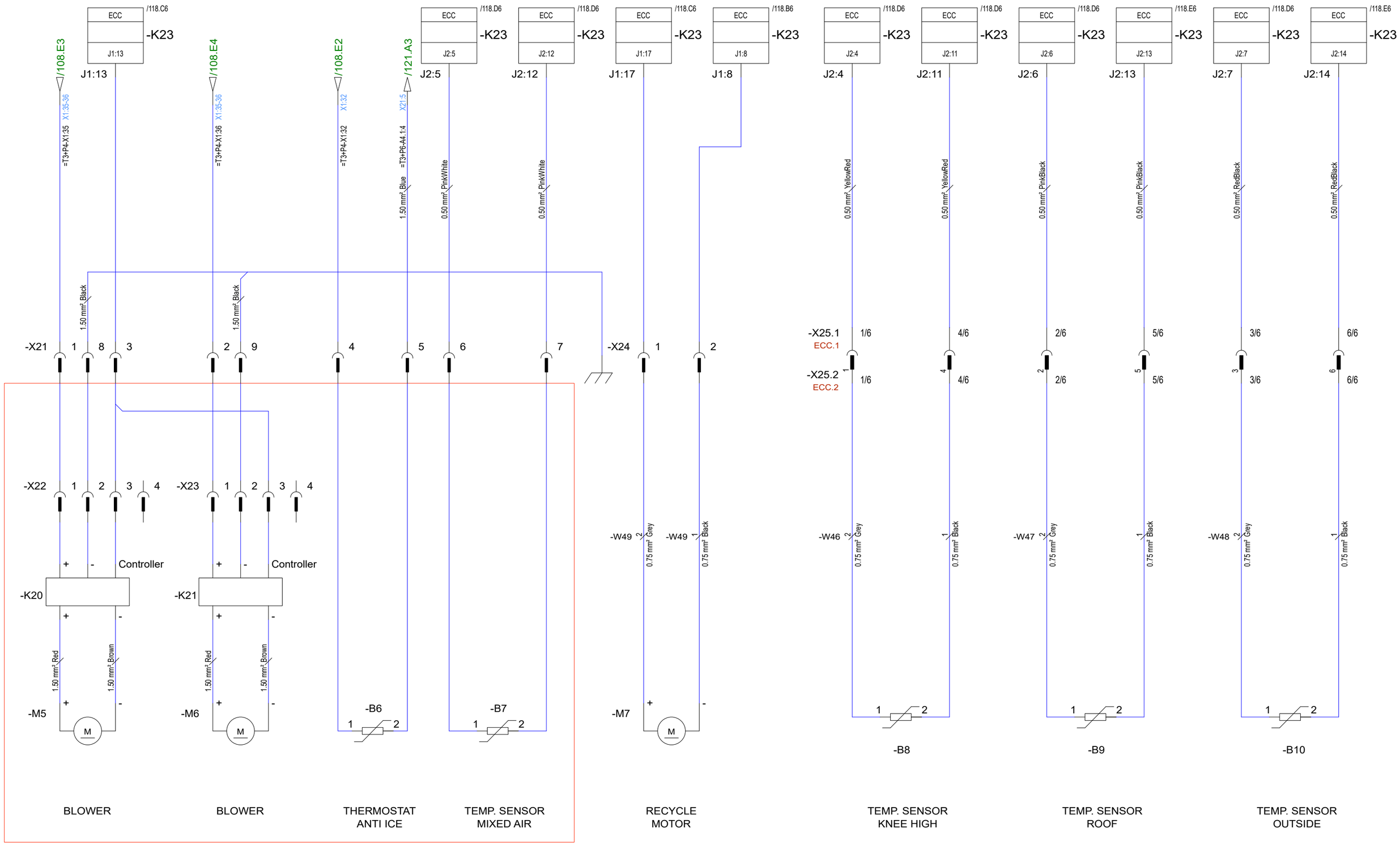

Rev	Note	Rev. date	Approved by

Terri 3 : Circuit Diagram

Drawing nr: 703074

Version	Current edition by	Current edition date
A	CV	2022-11-23

TERRI FOR ALL TERRAIN

HVAC Actuators

CIRCUIT DIAGRAM

Terri
0476-709790
www.terri.se

Approved by	
Approved date	
Designed by	CV
Date	2022-11-23

Sheet	Next	# sheets	Edition
116	117	39	A

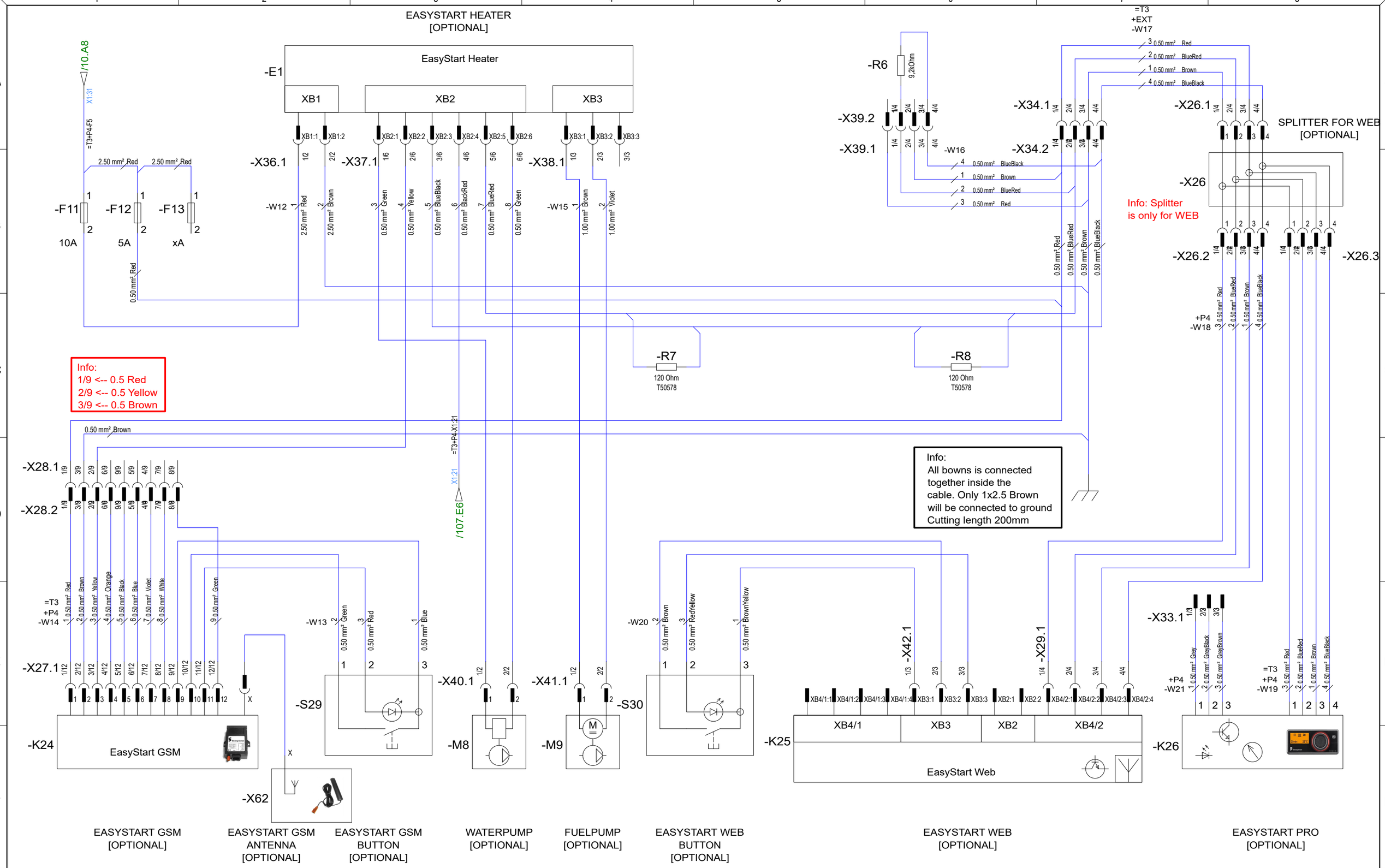

Rev	Note	Rev. date	Approved by

Terri 3 : Circuit Diagram

Drawing nr: 703074

Version	Current edition by	Current edition date
A	CV	2022-11-23

TERRI FOR ALL TERRAIN

Webasto

CIRCUIT DIAGRAM

Terri
0476-709790
www.terri.se

Approved by	
Approved date	
Designed by	CV
Date	2022-11-23

Sheet	Next	# sheets	Edition
117	118	39	A

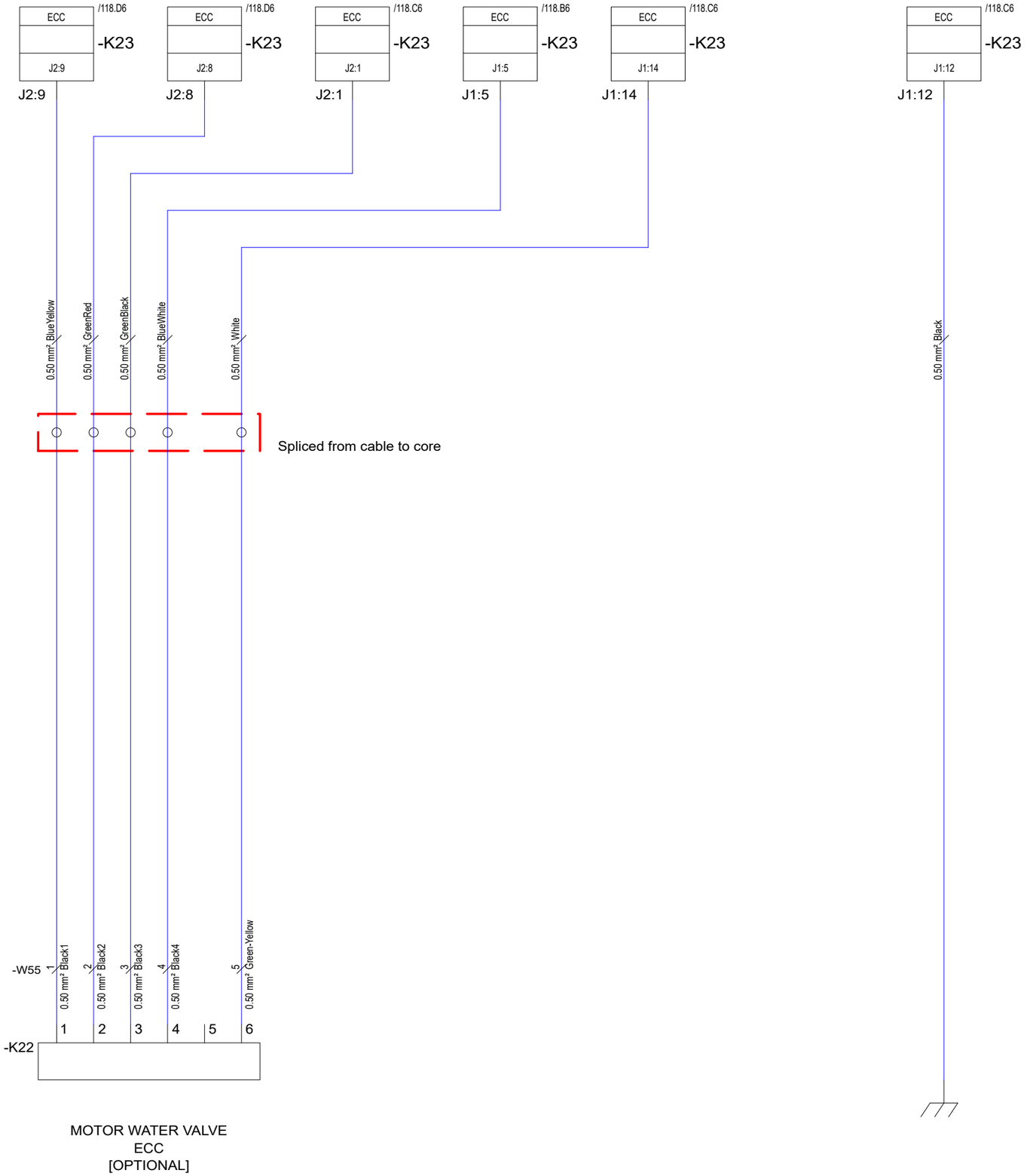

MOTOR WATER VALVE
ECC
[OPTIONAL]

-K23
8003090
ECC, CONTROL UNIT 8003090

J1			
1	J1-1	/108.F2	(3A)
2	J1-2	/107.F6	(10mA)
3	J1-3		
4	J1-4	/102.A7	
5	J1-5	/118.A3	
6	J1-6		
7	J1-7	/102.A6	
8	J1-8	/116.A5	(300mA)
9	J1-9		
10	J1-10		
11		/109.F3	(10mA)
12	J1-12	/118.A5	(3A)
13	J1-11 J1-13	/116.A1	(0-5V)
14	J1-14	/118.A4	(1A)
15	J1-15		
16	J1-16		
17	J1-17	/116.A4	(300mA)
18	J1-18		
19	J1-19		
20	J1-20		
J2			
1	J2-1	/118.A2	
2	J2-2		
3	J2-3		
4	J2-4	/116.A6	
5	J2-5	/116.A3	
6	J2-6	/116.A7	
7	J2-7	/116.A8	
8	J2-8	/118.A2	
9	J2-9	/118.A1	
10	J2-10		
11	J2-11	/116.A6	
12	J2-12	/116.A4	
13	J2-13	/116.A7	
14	J2-14	/116.A8	

J1

11	1
12	2
13	3
14	4
15	5
16	6
17	7
18	8
19	9
20	10

J2

8	1
9	2
10	3
11	4
12	5
13	6
14	7

Rev	Note	Rev. date	Approved by

Terri 3 : Circuit Diagram
Drawing nr:703074

Version	Current edition by	Current edition date
A	CV	2022-11-23

FOR ALL TERRAIN

ECC

CIRCUIT DIAGRAM

Terri
0476-709790
www.terri.se

Approved by	
Approved date	
Designed by	CV
Date	2022-11-23

Sheet	Next	# sheets	Edition
118	119	39	A

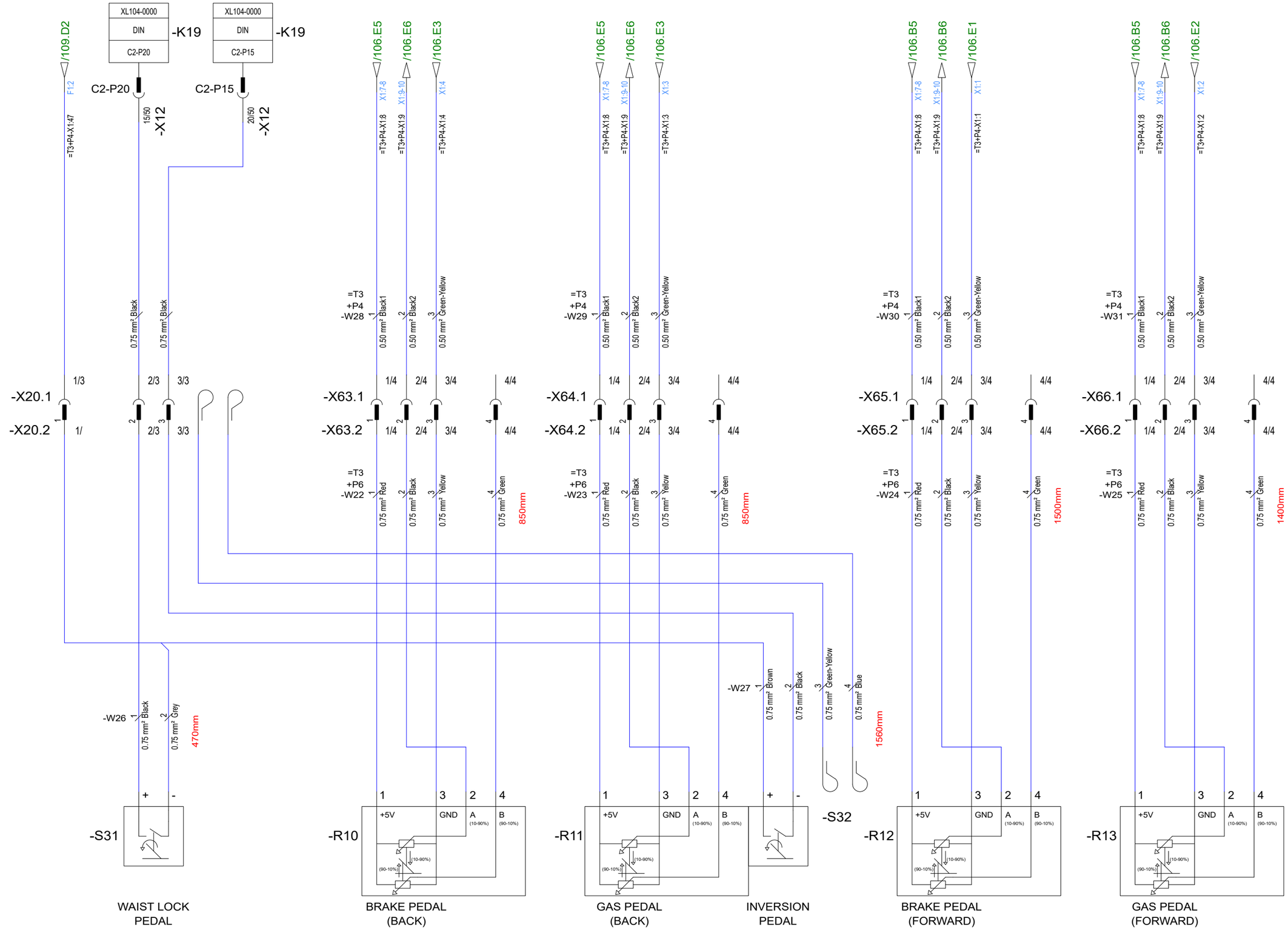

Rev	Note	Rev. date	Approved by

Terri 3 : Circuit Diagram

Drawing nr: 703074

Version	Current edition by	Current edition date
A	CV	2022-11-23

TERRI FOR ALL TERRAIN

Pedals

CIRCUIT DIAGRAM

Terri
0476-709790
www.terri.se

Approved by	
Approved date	
Designed by	CV
Date	2022-11-23

Sheet	Next	# sheets	Edition
119	120	39	A

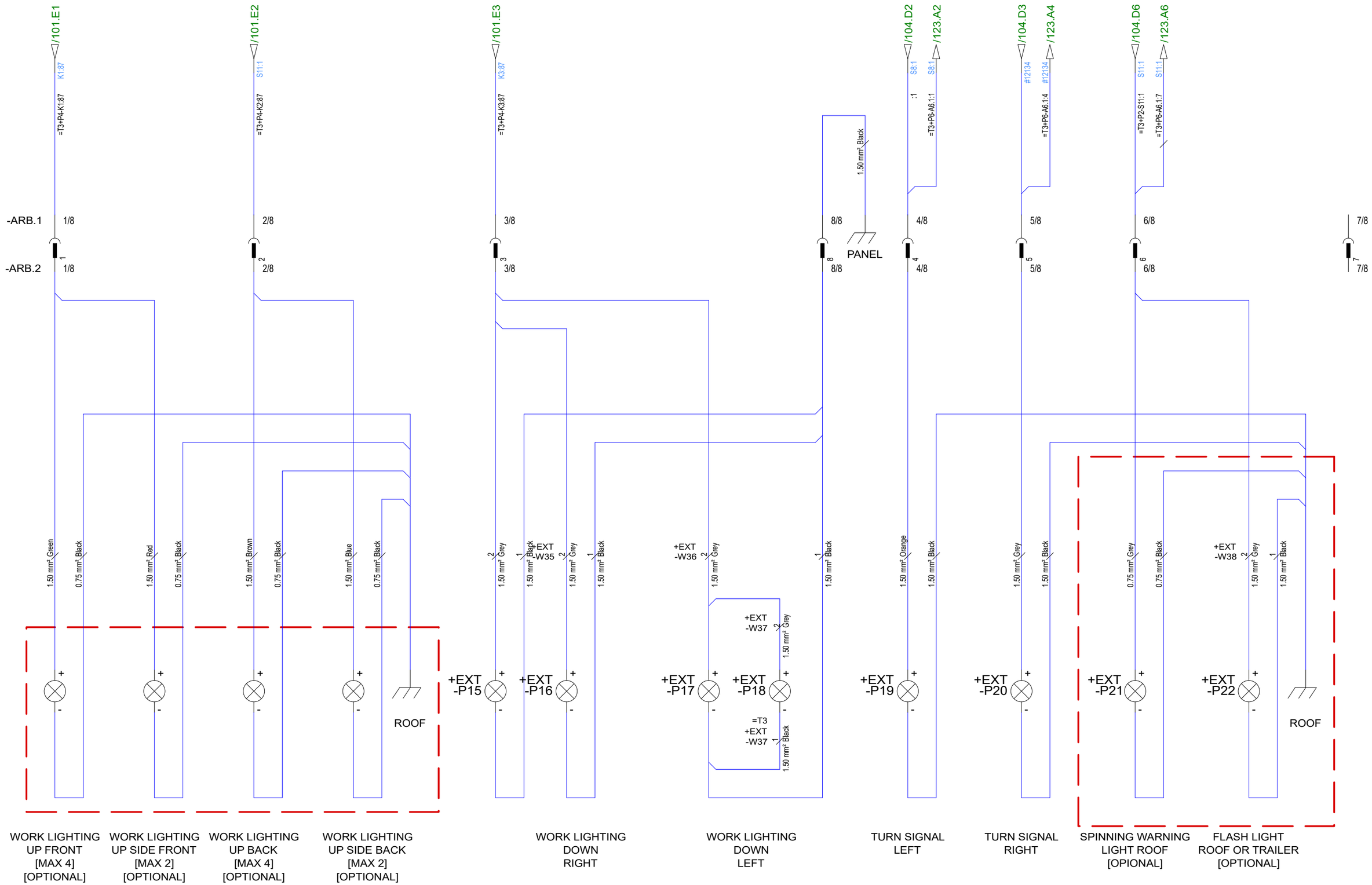

Rev	Note	Rev. date	Approved by

Terri 3 : Circuit Diagram

Drawing nr: 703074

Version	Current edition by	Current edition date
A	CV	2022-11-23

TERRI FOR ALL TERRAIN

Work Lights

CIRCUIT DIAGRAM

Terri
0476-709790
www.terri.se

Approved by	
Approved date	
Designed by	CV
Date	2022-11-23

Sheet	Next	# sheets	Edition
120	121	39	A

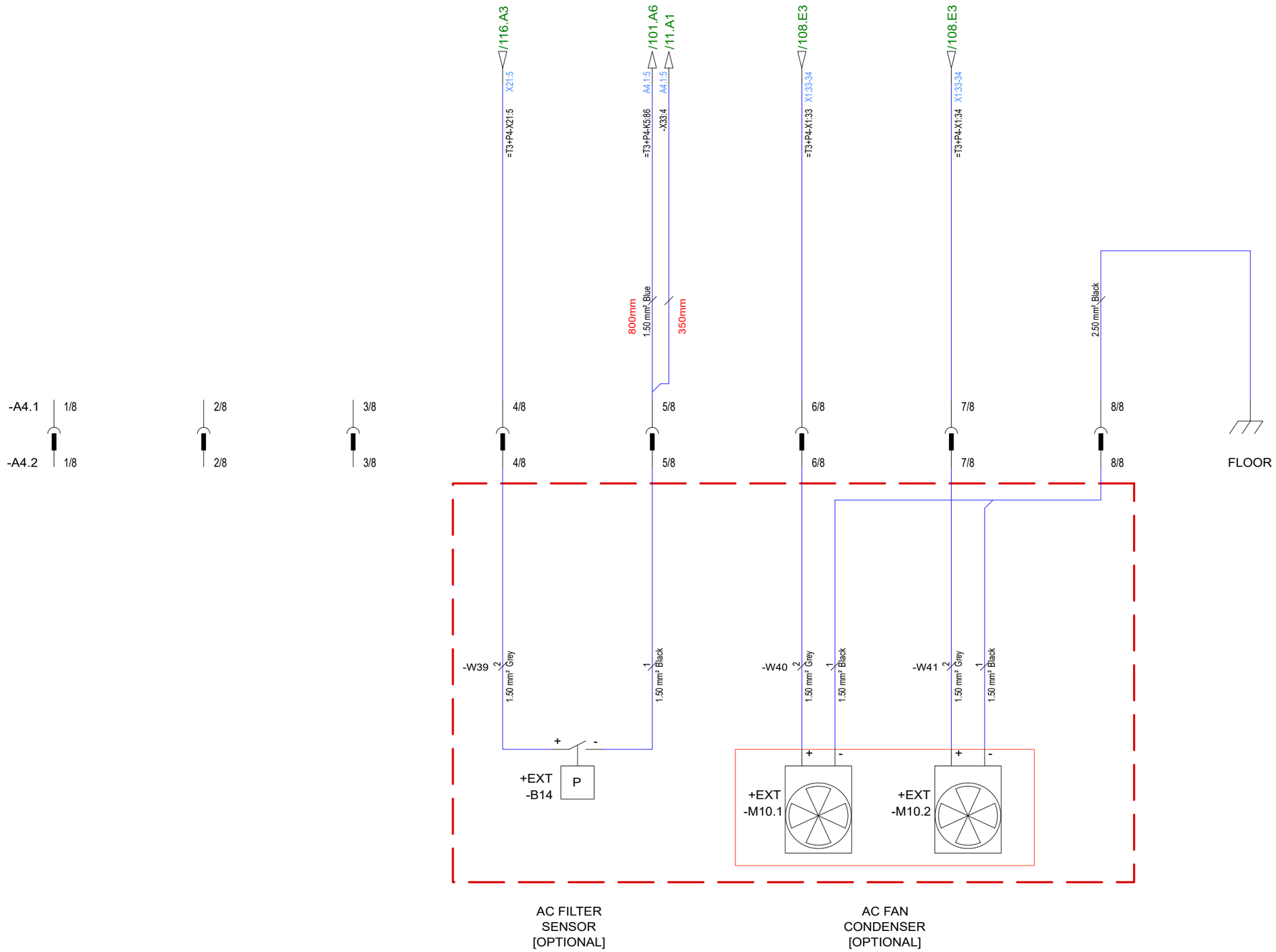

Rev	Note	Rev. date	Approved by

Terri 3 : Circuit Diagram

Drawing nr: 703074

Version	Current edition by	Current edition date
A	CV	2022-11-23

FOR ALL TERRAIN

Condensor

CIRCUIT DIAGRAM

Terri
0476-709790
www.terri.se

Approved by	
Approved date	
Designed by	CV
Date	2022-11-23

Sheet	Next	# sheets	Edition
121	122	39	A

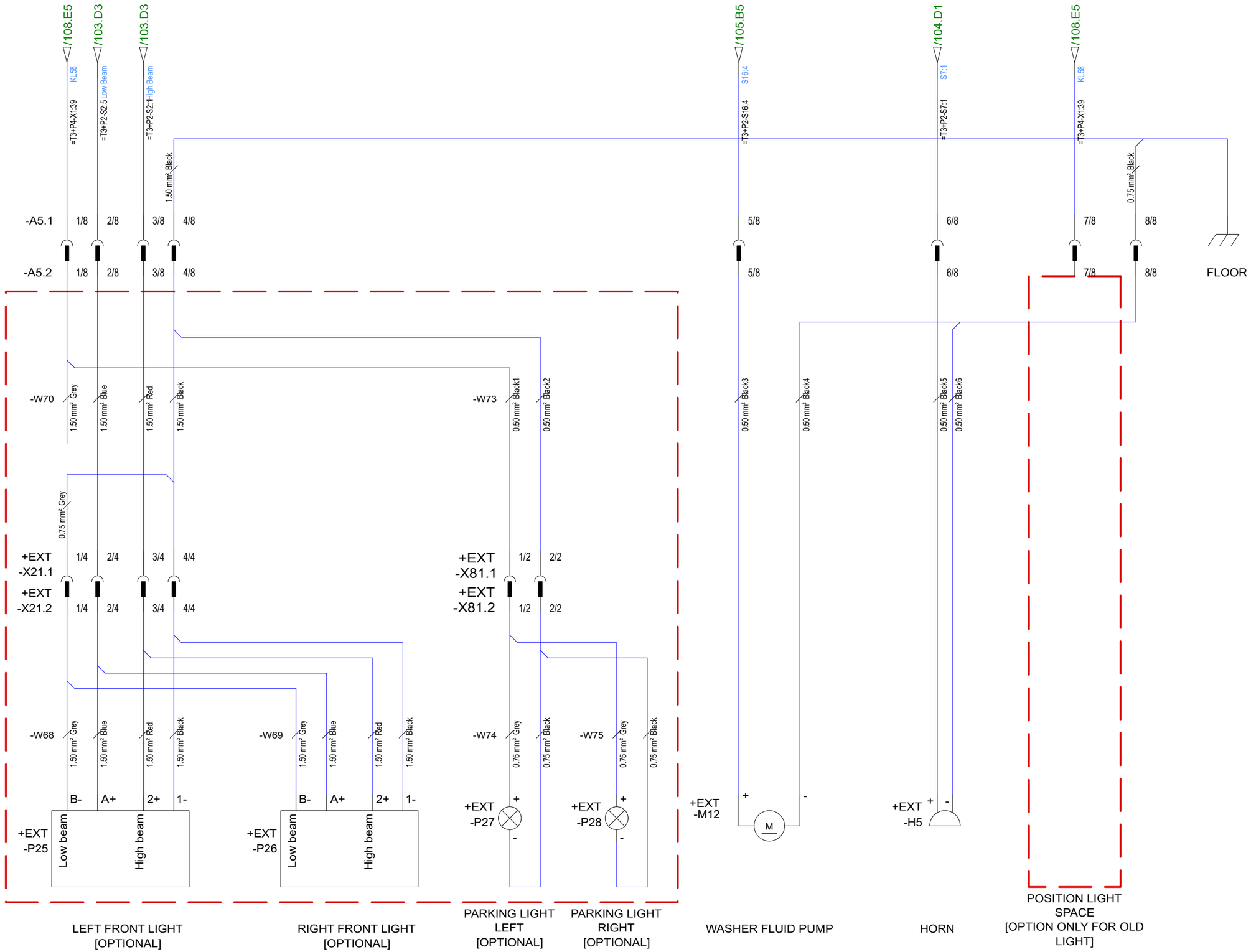

Rev	Note	Rev. date	Approved by

Terri 3 : Circuit Diagram

Drawing nr: 703074

Version	Current edition by	Current edition date
A	CV	2022-11-23

TERRI FOR ALL TERRAIN

Travel Lights

CIRCUIT DIAGRAM

Terri
0476-709790
www.terri.se

Approved by	
Approved date	
Designed by	CV
Date	2022-11-23

Sheet	Next	# sheets	Edition
122	123	39	A

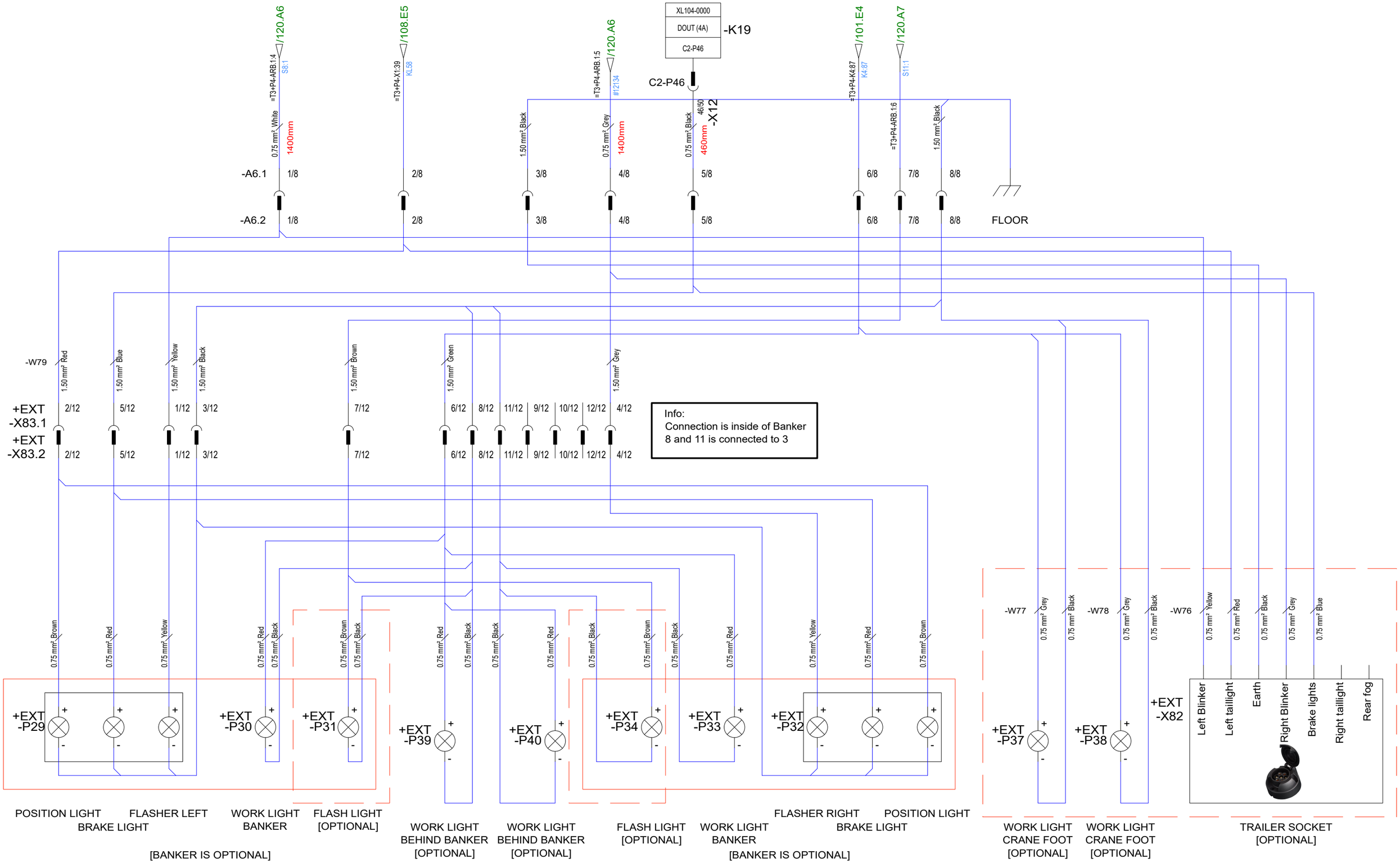

Rev	Note	Rev. date	Approved by

Terri 3 : Circuit Diagram

Drawing nr: 703074

Version	Current edition by	Current edition date
A	CV	2022-11-23

TERRI FOR ALL TERRAIN

Rear Lights

CIRCUIT DIAGRAM

Terri
0476-709790
www.terri.se

Approved by	
Approved date	
Designed by	CV
Date	2022-11-23

Sheet	Next	# sheets	Edition
123	124	39	A

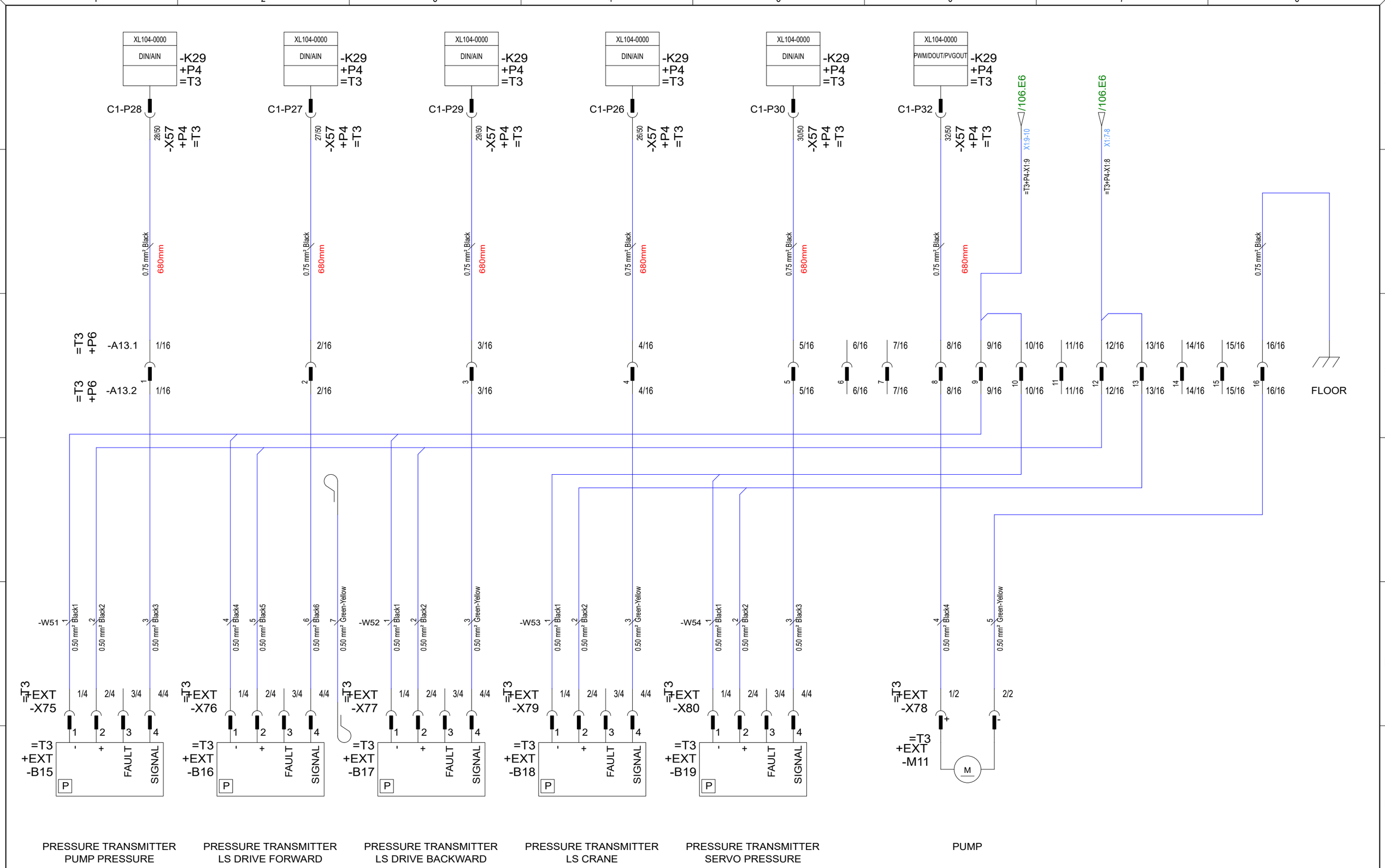

Rev	Note	Rev. date	Approved by

Terri 3 : Circuit Diagram

Drawing nr: 703074

Version	Current edition by	Current edition date
A	CV	2022-11-23

TERRI FOR ALL TERRAIN

Hydraulic Pressure Sensors

CIRCUIT DIAGRAM

Terri
0476-709790
www.terri.se

Approved by	
Approved date	
Designed by	CV
Date	2022-11-23

Sheet	Next	# sheets	Edition
124	125	39	A

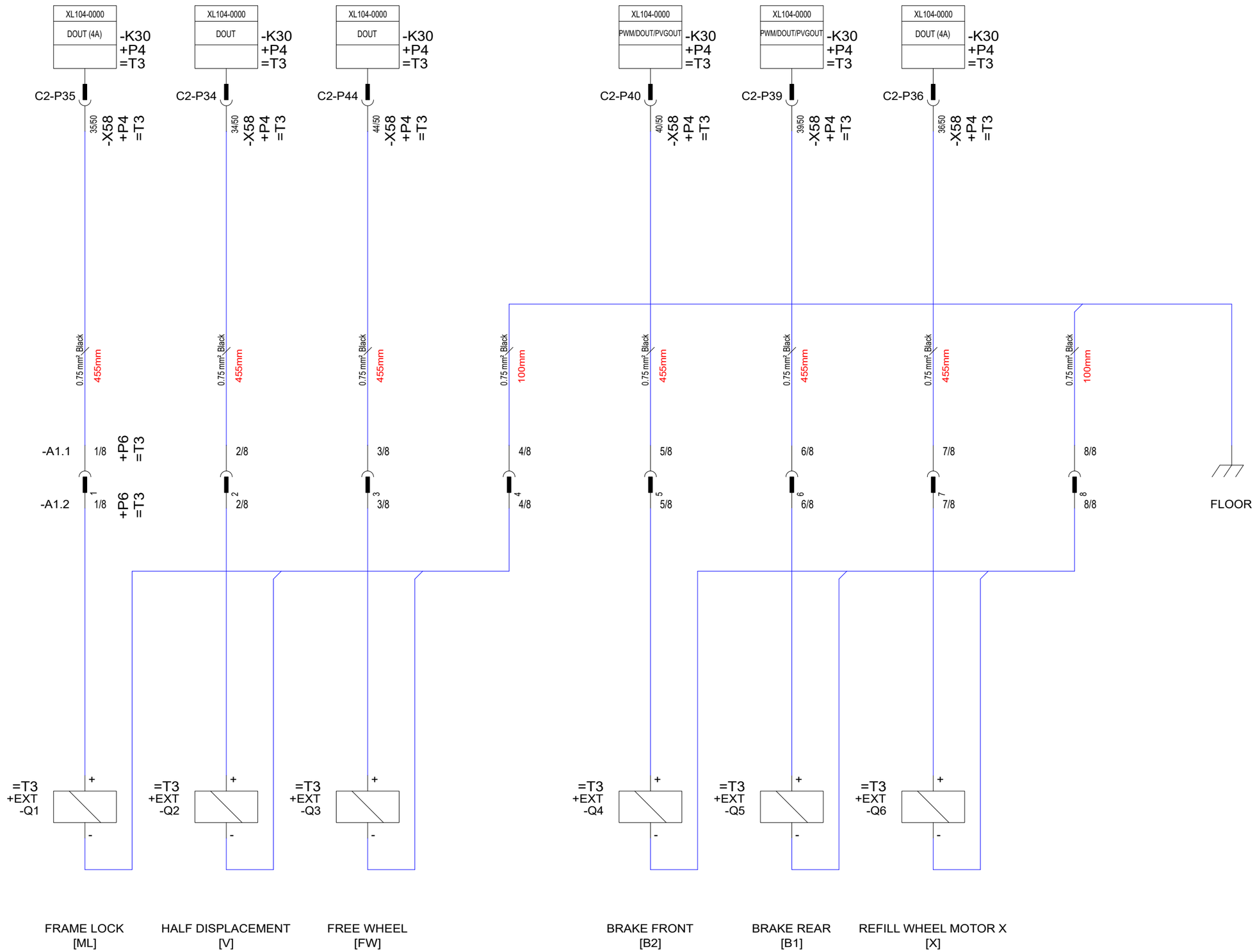

Rev	Note	Rev. date	Approved by

Terri 3 : Circuit Diagram

Drawing nr: 703074

Version	Current edition by	Current edition date
A	CV	2022-11-23

TERRI FOR ALL TERRAIN

Hydraulic Servo Valves 1

CIRCUIT DIAGRAM

Terri
0476-709790
www.terri.se

Approved by	
Approved date	
Designed by	CV
Date	2022-11-23

Sheet	Next	# sheets	Edition
125	126	39	A

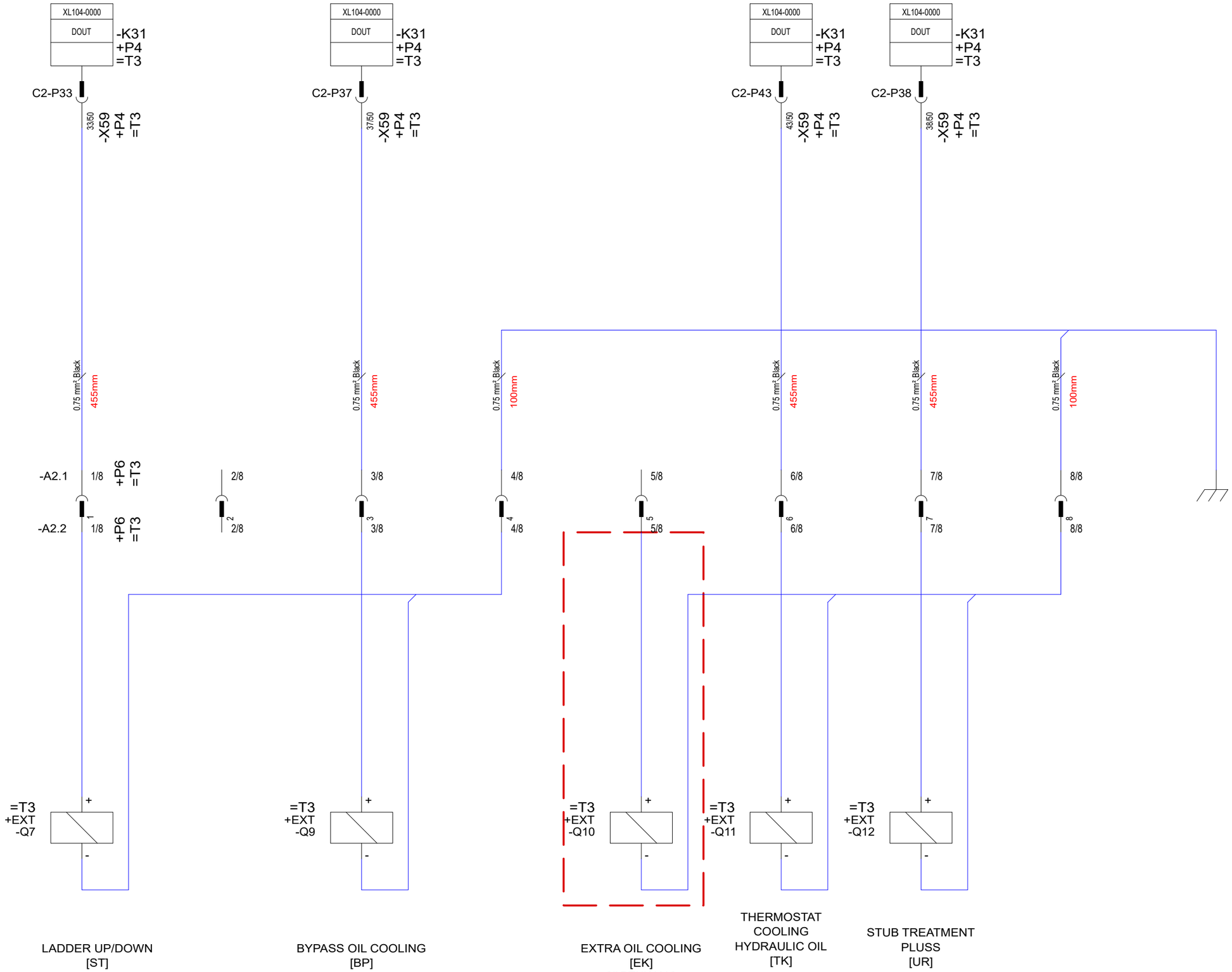

Rev	Note	Rev. date	Approved by

Terri 3 : Circuit Diagram

Drawing nr: 703074

Version	Current edition by	Current edition date
A	CV	2022-11-23

TERRI FOR ALL TERRAIN

Hydraulic Servo Valves 2

CIRCUIT DIAGRAM

Terri
0476-709790
www.terri.se

Approved by	
Approved date	
Designed by	CV
Date	2022-11-23

Sheet	Next	# sheets	Edition
126	127	39	A

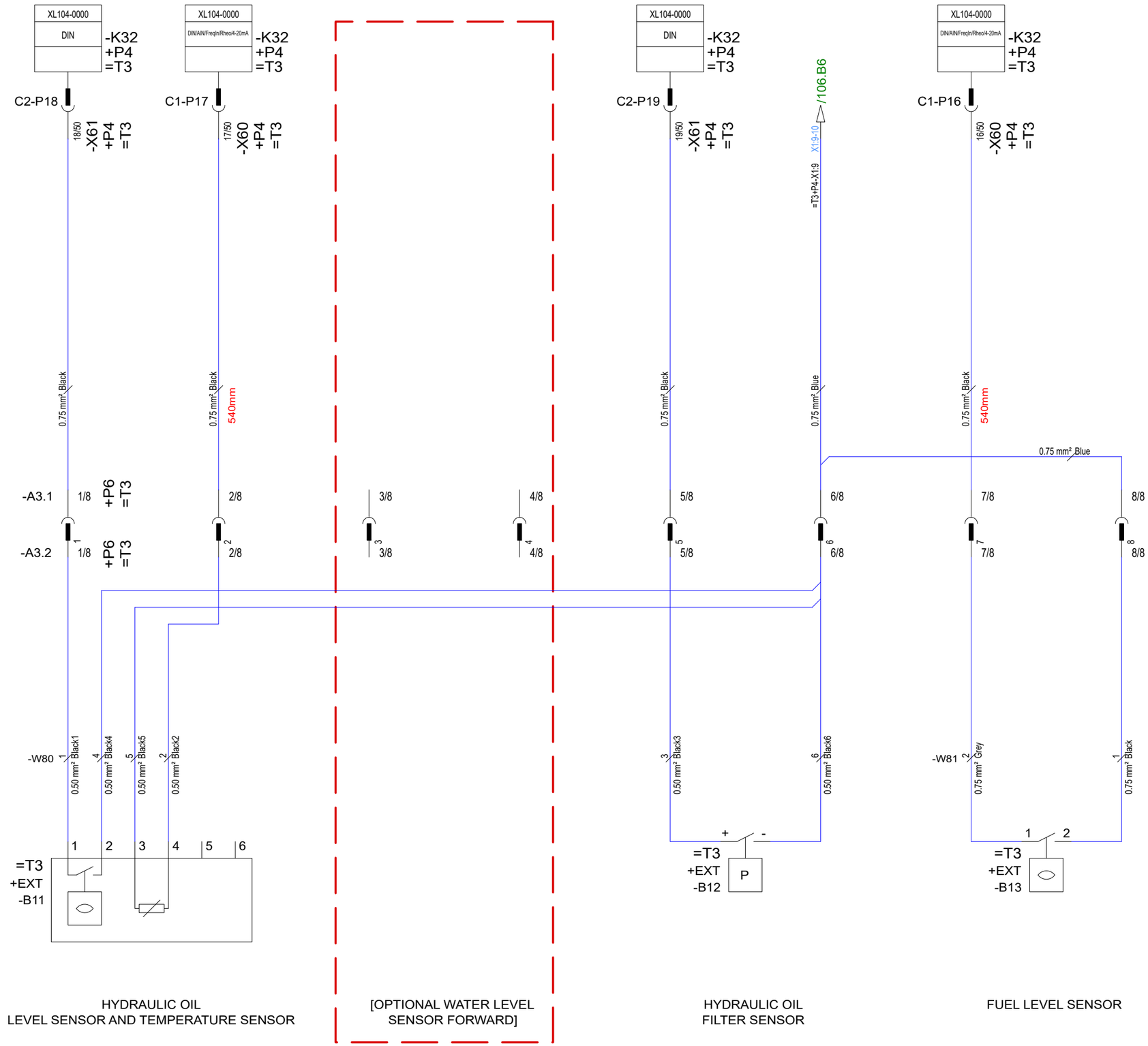

Rev	Note	Rev. date	Approved by

Terri 3 : Circuit Diagram

Drawing nr: 703074

Version	Current edition by	Current edition date
A	CV	2022-11-23

TERRI FOR ALL TERRAIN

Extra Sensors

CIRCUIT DIAGRAM

Terri
0476-709790
www.terri.se

Approved by	
Approved date	
Designed by	CV
Date	2022-11-23

Sheet	Next	# sheets	Edition
127	128	39	A

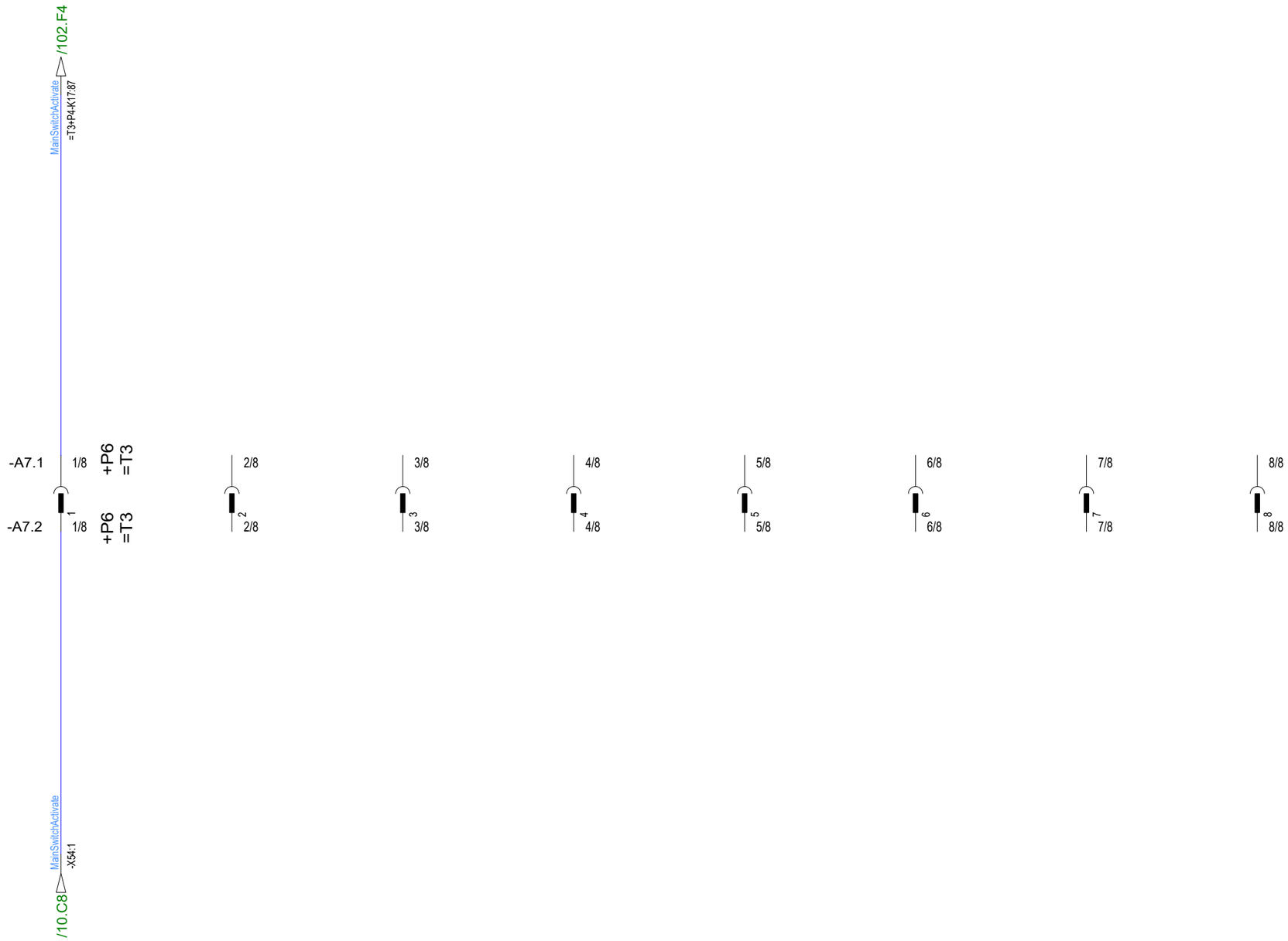

Rev	Note	Rev. date	Approved by

Terri 3 : Circuit Diagram

Drawing nr: 703074

Version	Current edition by	Current edition date
A	CV	2022-11-23

FOR ALL TERRAIN

Extra Sensors

CIRCUIT DIAGRAM

Terri
0476-709790
www.terri.se

Approved by	
Approved date	
Designed by	CV
Date	2022-11-23

Sheet	Next	# sheets	Edition
128	129	39	A

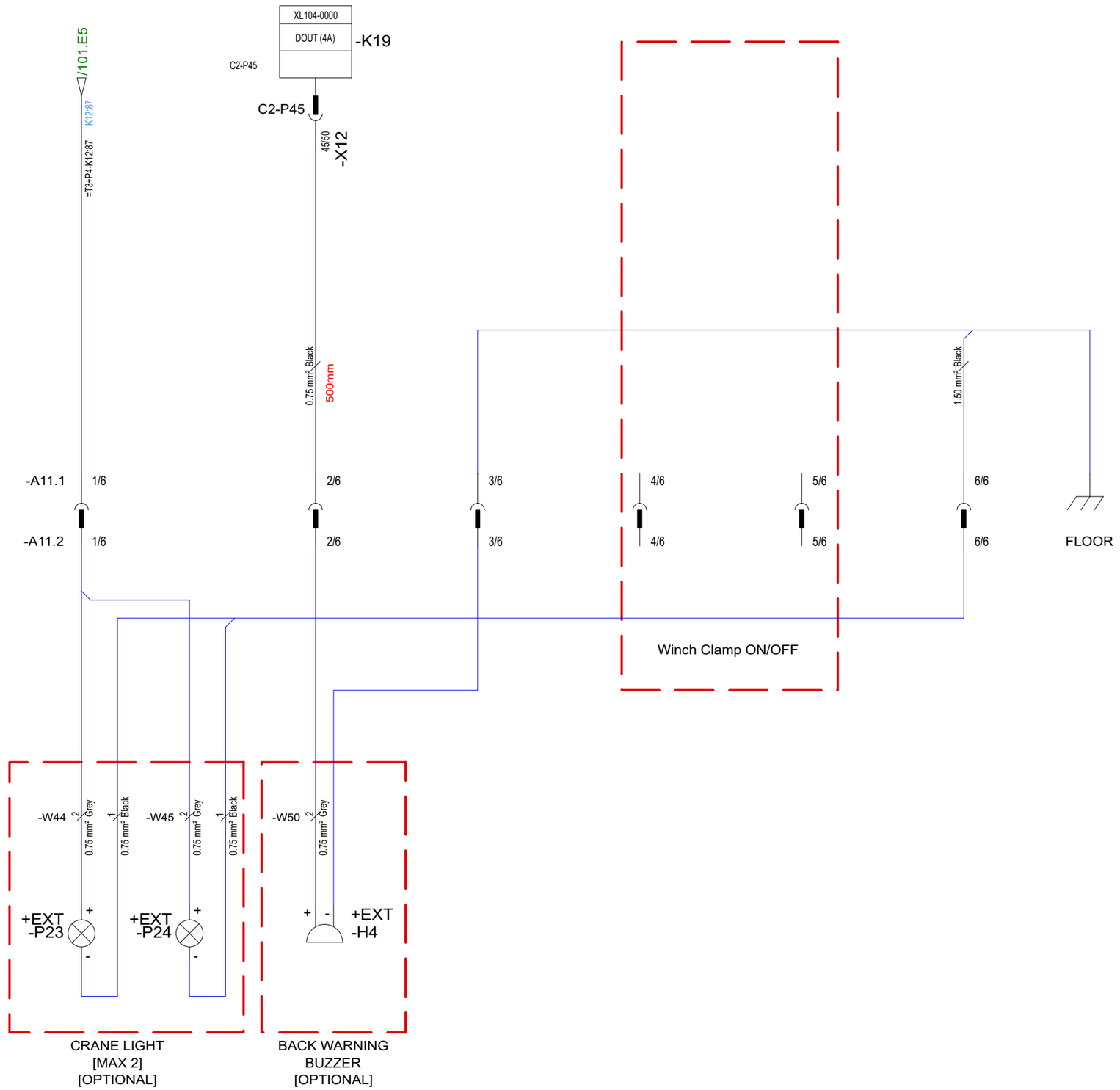

Rev	Note	Rev. date	Approved by

Terri 3 : Circuit Diagram

Drawing nr: 703074

Version	Current edition by	Current edition date
A	CV	2022-11-23

TERRI FOR ALL TERRAIN

Crane Lights

CIRCUIT DIAGRAM

Terri
0476-709790
www.terri.se

Approved by	
Approved date	
Designed by	CV
Date	2022-11-23

Sheet	Next	# sheets	Edition
129	-	39	A