TERRI

FOR ALL TERRAIN

Rev	Note	Rev. date	Approved by
B		2025-09-10	

Terri 3 : Circuit Diagram

Drawing nr: 703074

Version	Current edition by	Current edition date
1	Carl	2025-09-10

TERRI FOR ALL TERRAIN

Cover Sheet

Terri
0476-709790
www.terri.se

Approved by	
Approved date	
Designed by	CV
Date	2022-11-23

Sheet	Next	# sheets	Edition
0	1	31	B

Rev	Note	Rev. date	Approved by
B		2025-09-10	

Terri 3 : Circuit Diagram

Drawing nr: 703074

Version	Current edition by	Current edition date
1	Carl	2025-09-10

FOR ALL TERRAIN

List Of Content

LIST OF CONTENTS

Terri
0476-709790
www.terri.se

Approved by	
Approved date	
Designed by	CV
Date	2022-11-23

Sheet	Next	# sheets	Edition
1	2	31	B

KT-703180

Fuse	Size	Type	Function
F1	40A	Maxi	Engine ECU Main Power
F2	30A	Maxi	Engine Glow Plugs
F3	40A	Maxi	External Diesel/Hydraulic Fill Pump
F4	20A	Standard	Engine Starter Motor Solenoid
F5	5A	Mini	Low Pressure Fuel Pump Relay
F6	7.5A	Mini	Low Pressure Fuel Pump

KT-703180

Relay	Type	Function
K1	Mini	Engine ECU Main Power Relay
K2	Mini	Engine Glow Plug Relay
K3	Micro	Low Pressure Fuel Pump Relay
K4	Micro	Engine Starter Motor Solenoid Relay

KT-703180

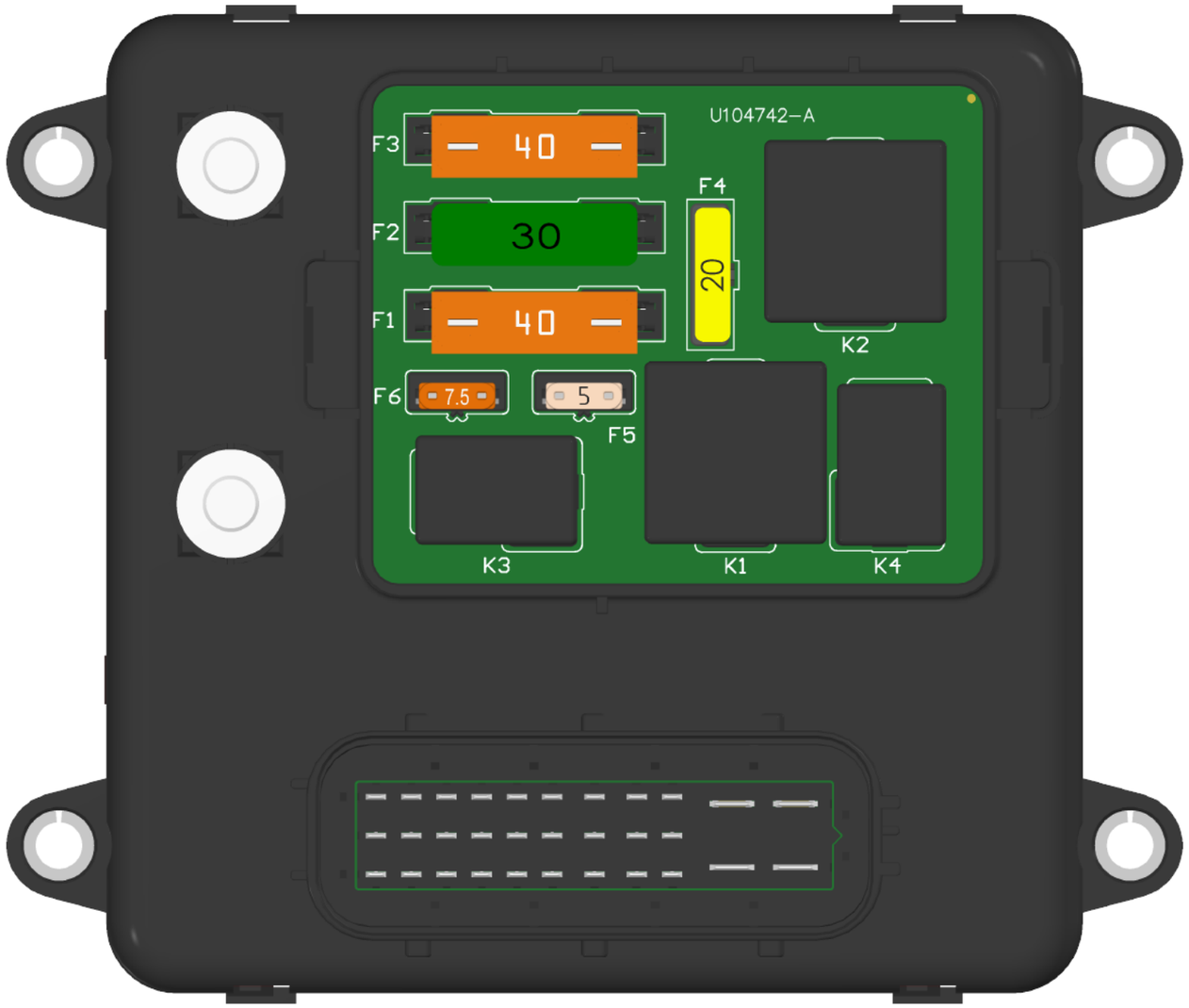

Rev	Note	Rev. date	Approved by
B		2025-09-10	

Terri 3 : Circuit Diagram

Drawing nr: 703074

Version	Current edition by	Current edition date
1	Carl	2025-09-10

TERRI FOR ALL TERRAIN

Engine Relays & Fuses

GENERAL DRAWING

Terri
0476-709790
www.terri.se

Approved by	
Approved date	
Designed by	CV
Date	2022-11-23

Sheet	Next	# sheets	Edition
2	3	31	B

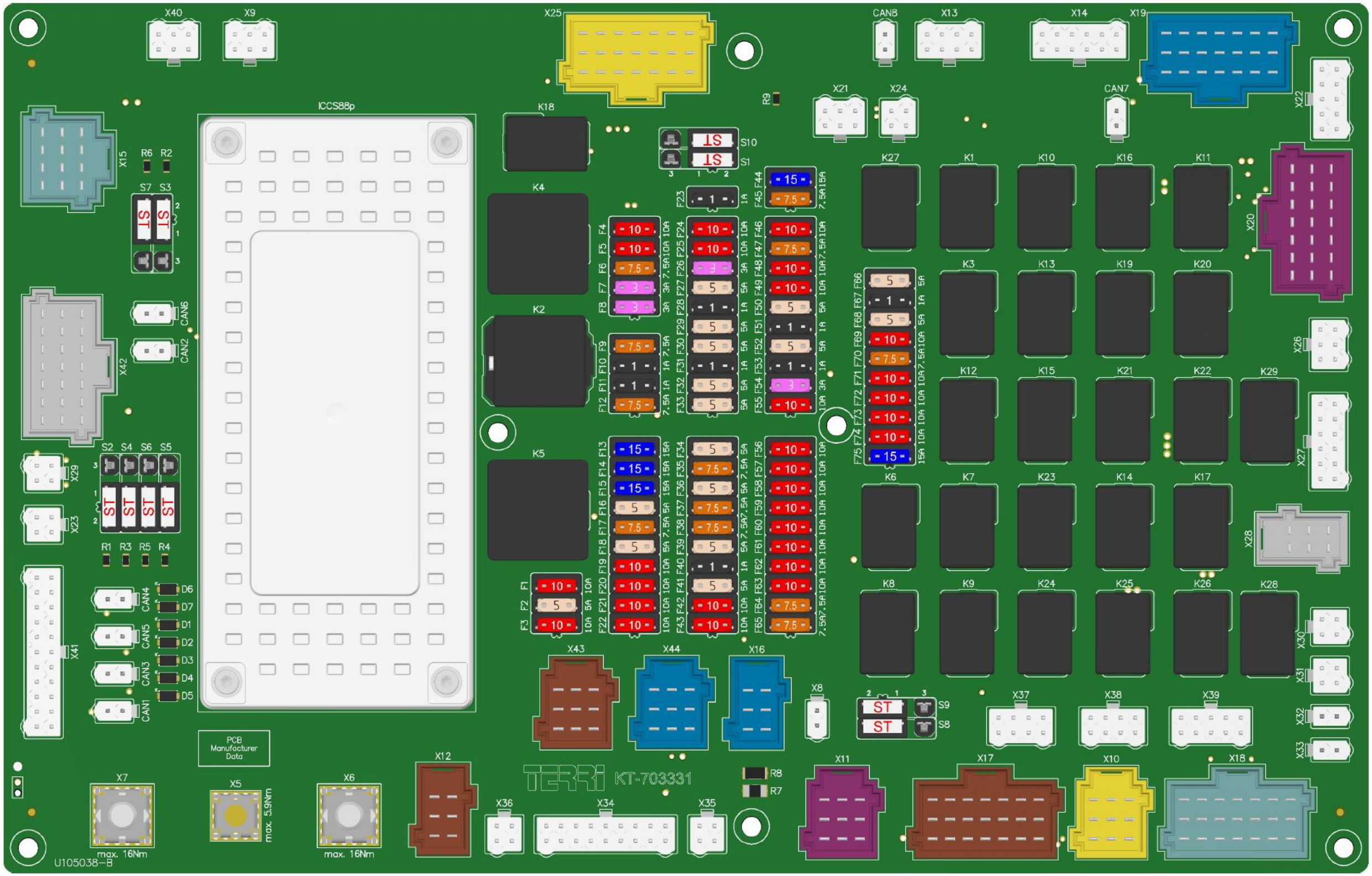

Rev	Note	Rev. date	Approved by
B		2025-09-10	

Terri 3 : Circuit Diagram

Drawing nr: 703074

Version	Current edition by	Current edition date
1	Carl	2025-09-10

TERRI FOR ALL TERRAIN

Terri CEU

GENERAL DRAWING

Terri
0476-709790
www.terri.se

Approved by	
Approved date	
Designed by	CV
Date	2022-11-23

Sheet	Next	# sheets	Edition
3	4	31	B

RELÄER

K1	Huvudström
K2	KL15 Tändning
K3	Extra tak
K4	Kupefläkt
K5	AC och Kondensorfläkt
K6	Signalhorn
K7	Spolarvätskepump
K8	Helljus
K9	Halvljus
K10	Färdriktningsvisare vänster
K11	Färdriktningsvisare höger
K12	Arbetsbelysning fram
K13	Arbetsbelysning bak
K14	Arbetsbelysning vagn
K15	Arbetsbelysning kran
K16	Arbetsbelysning sidor
K17	Roterande varningsljus
K18	Vindrutetorkare fram
K19	Vindrutetorkare bak
K20	Vindrutetorkare bak hastighet 2
K21	Skördaraggregat 1
K22	Skördaraggregat 2
K23	Extra bak
K24	Extra hytt 1
K25	Extra hytt 2
K26	Forester system
K27	Motor tändning
K28	Stolsbroms
K29	Droppen Dos

Säkringar

F1	10A	Kondensorfläkt 2
F2	5A	AC Kompressor
F3	10A	Kondensorfläkt 1
F4	10A	Kupefläkt 1
F5	10A	Kupefläkt 2
F6	7,5A	dLPM
F7	3A	Radio minne
F8	3A	Fogmaker
F9	7,5A	Hydraulventiler kran
F10	1A	Display tändning
F11	1A	Extra IO 1 tändning
F12	7,5A	Hydraulventiler drivning
F13	15A	Huvudstyrenhet kraft 3
F14	15A	Huvudstyrenhet kraft 1
F15	15A	Huvudstyrenhet kraft 2
F16	5A	Huvudstyrenhet tändning
F17	7,5A	Display kraftmatning
F18	5A	CAT diagnostik
F19	10A	Extra IO2 kraft 3
F20	10A	Extra IO1 kraft 3
F21	10A	Extra IO1 kraft 2
F22	10A	Extra IO1 kraft 1
F23	1A	Aktivering huvudbrytare
F24	10A	Vindrutetorkare fram
F25	10A	Dieselvärmare
F26	3A	ECC kraft
F27	5A	Telematic modem
F28	1A	Dörrbrytare
F29	5A	ECC tändning
F30	5A	Radio tändning
F31	1A	Extra IO2 tändning
F32	5A	Stolsvärme och ventilation
F33	5A	Positionljus bak & skördaraggregat CPU
F34	5A	Färdriktningsvisare höger
F35	7,5A	Spolarvätskepump
F36	5A	Signalhorn
F37	5A	Halvljus
F38	7,5A	Helljus
F39	5A	Positionljus fram
F40	1A	Givare stolsläge
F41	5A	Armstödspaneler
F42	10A	Extra IO kraft 2
F43	10A	Extra IO kraft 1
F44	15A	Matlådevärmare
F45	7,5A	Vinsch relä
F46	10A	Baslåda
F47	7,5A	Droppen dos
F48	10A	24V uttag
F49	10A	Radio
F50	5A	USB uttag
F51	1A	Nödstopp
F52	5A	Vinsch radiomottagare
F53	1A	Inverteringspedal
F54	3A	Kamerasystem
F55	10A	Extra IO tak
F56	10A	Skördaraggregat kraft 1
F57	10A	Roterande varningsljus
F58	10A	Skördaraggregat kraft 2
F59	10A	Extra bak
F60	10A	Arbetsbelysning vagn
F61	10A	Forester system
F62	10A	Extra hytt 2
F63	10A	Extra hytt 1
F64	7,5A	Stolsbromsmotor
F65	7,5A	Stolskompressor
F66	5A	Motortändning
F67	5A	Telematic modem tändning
F68	5A	Färdriktningsvisare vänster
F69	10A	Arbetsbelysning sidor
F70	7,5A	Extra tak
F71	10A	Arbetsbelysning bak
F72	10A	Vindrutetorkare bak
F73	10A	Arbetsbelysning fram
F74	10A	Arbetsbelysning kran
F75	15A	Extra hytt

Art. no. XXXXXse

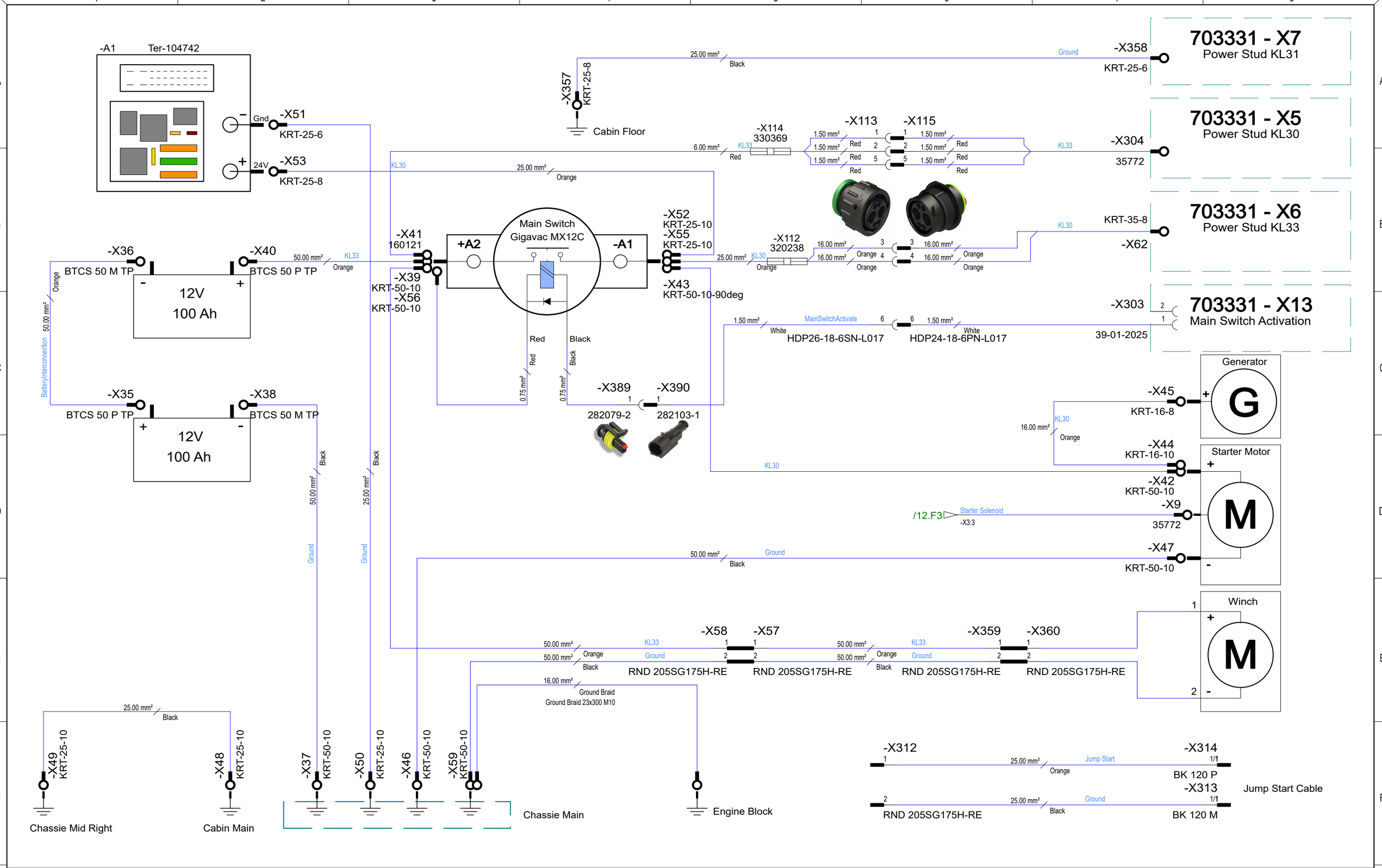

Rev	Note	Rev. date	Approved by
B		2025-09-10	

Terri 3 : Circuit Diagram

Drawing nr: 703074

Version	Current edition by	Current edition date
1	Carl	2025-09-10

TERRI FOR ALL TERRAIN

Power Supply

CIRCUIT DIAGRAM

Terri
0476-709790
www.terri.se

Approved by	
Approved date	
Designed by	CV
Date	2022-11-23

Sheet	Next	# sheets	Edition
10	11	31	B

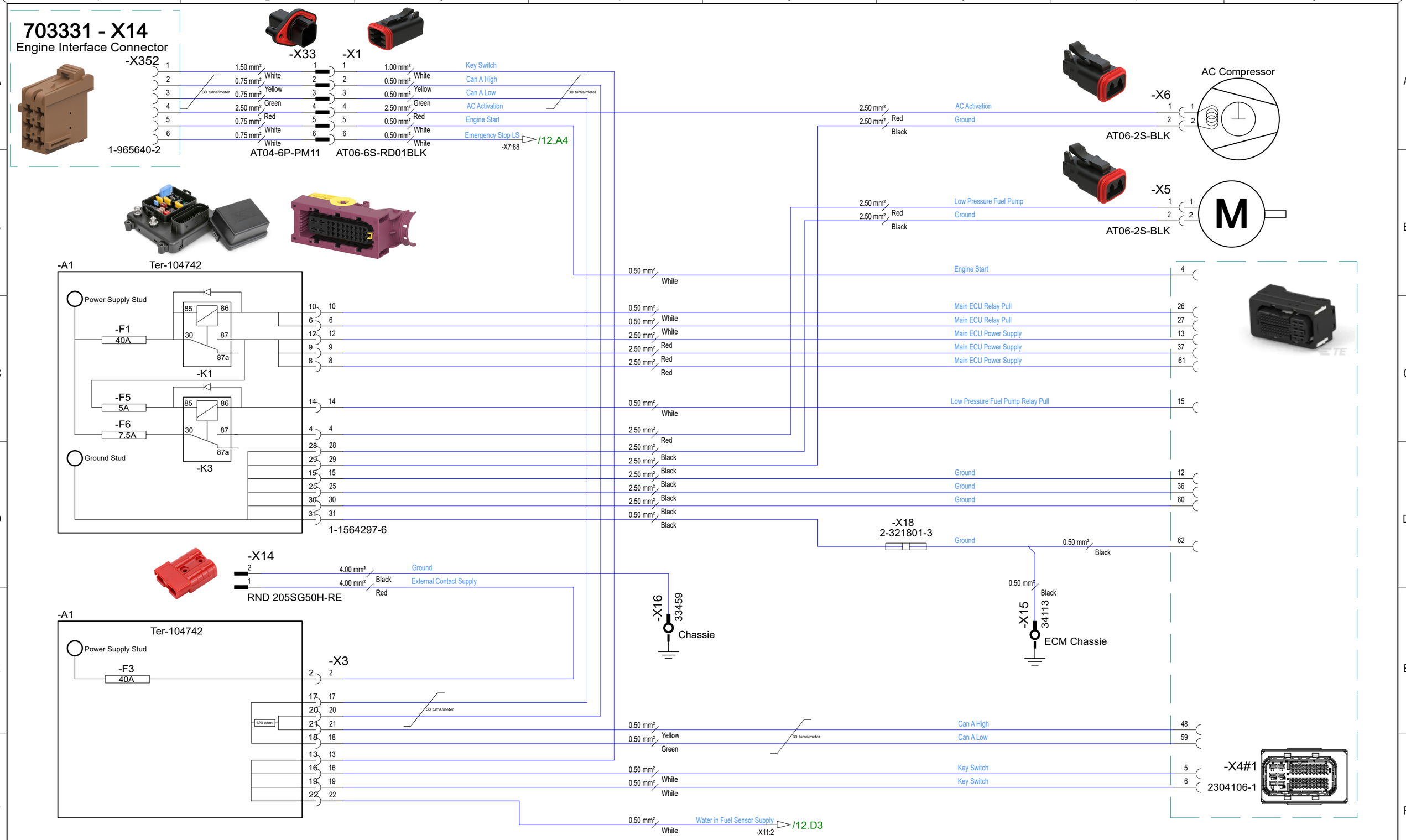

Rev	Note	Rev. date	Approved by
B		2025-09-10	

Terri 3 : Circuit Diagram

Drawing nr: 703074

Version	Current edition by	Current edition date
1	Carl	2025-09-10

TERRI FOR ALL TERRAIN

ECM Power Supply

CIRCUIT DIAGRAM

Terri
0476-709790
www.terri.se

Approved by	
Approved date	
Designed by	CV
Date	2022-11-23

Sheet	Next	# sheets	Edition
11	12	31	B

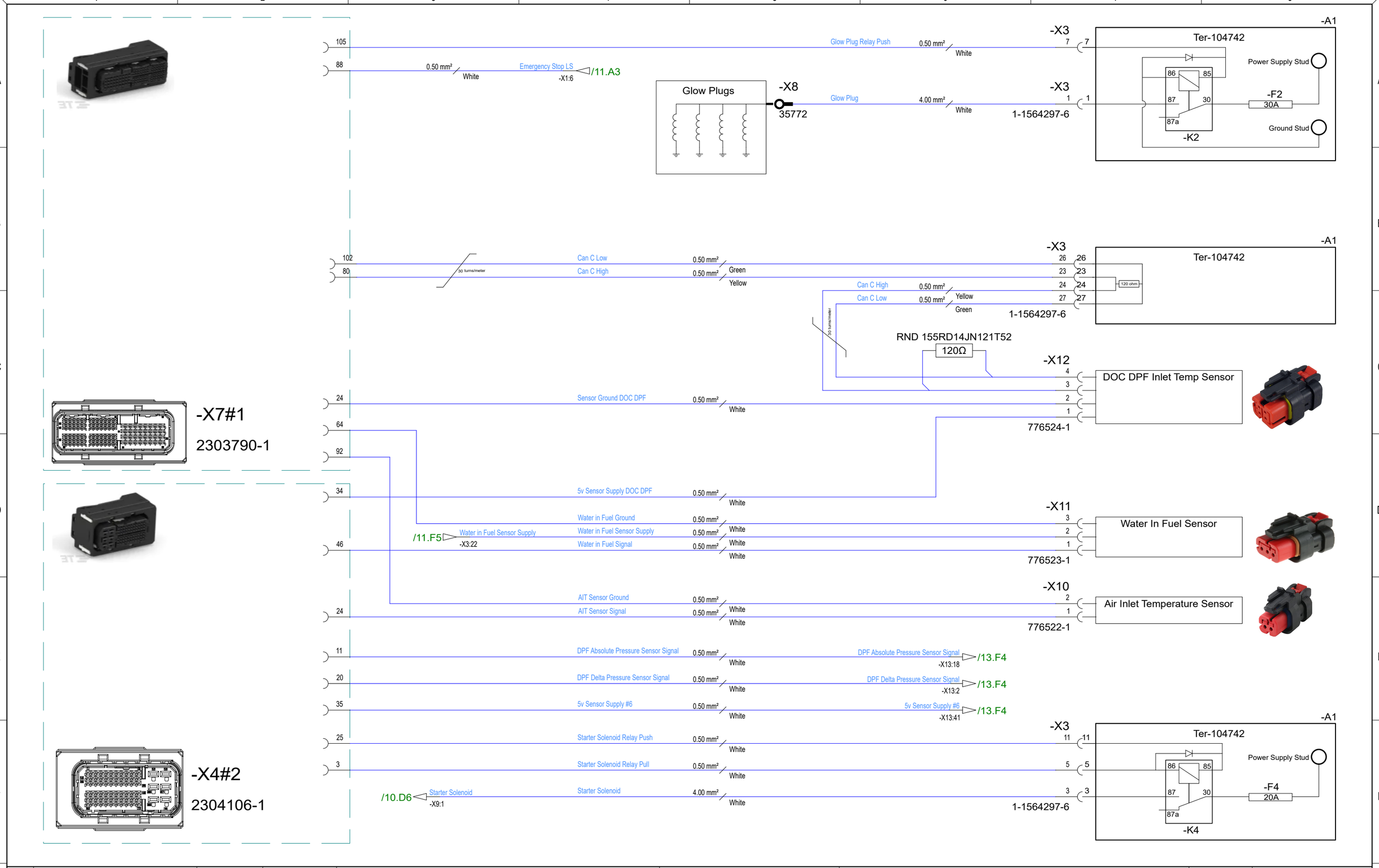

B		2025-09-10	
Rev	Note	Rev. date	Approved by

Terri 3 : Circuit Diagram

Drawing nr: 703074

Version	Current edition by	Current edition date
1	Carl	2025-09-10

TERRI FOR ALL TERRAIN

ECM Auxiliary

CIRCUIT DIAGRAM

Terri
0476-709790
www.terri.se

Approved by	
Approved date	
Designed by	CV
Date	2022-11-23

Sheet	Next	# sheets	Edition
12	13	31	B

53		30 turns/meter	1.00 mm²		Injector #1 HS	1
31			1.00 mm²	White	Injector #1 LS	34
				White		
78		30 turns/meter	1.00 mm²		Injector #2 HS	4
79			1.00 mm²	White	Injector #2 LS	3
				White		
100		30 turns/meter	1.00 mm²		Injector #3 HS	5
101			1.00 mm²	White	Injector #3 LS	15
				White		
54		30 turns/meter	1.00 mm²		Injector #4 HS	6
32			1.00 mm²	White	Injector #4 LS	7
				White		
94		30 turns/meter	1.00 mm²		Fuel Pump Control Valve HS	40
72			1.00 mm²	White	Fuel Pump Control Valve LS	39
				White		
29		30 turns/meter	1.00 mm²		Throttle Valve HS	43
51			1.00 mm²	White	Throttle Valve LS	42
				White		
73		30 turns/meter	1.00 mm²		NRS Valve HS	25
95			1.00 mm²	White	NRS Valve LS	12
				White		
52		30 turns/meter	1.00 mm²		Wastegate Valve HS	28
30			1.00 mm²	White	Wastegate Valve LS	29
				White		
9	0.50 mm²					
10	0.50 mm²	-X17 2-321801-3				
58		White		White		
		30 turns/meter	0.50 mm²		Fuel Rail Pressure Sensor Signal	32
			0.50 mm²	White	Fuel Rail Pressure Sensor Return	38
				White		
84		30 turns/meter	0.50 mm²		Crankshaft Speed Sensor Signal	36
106			0.50 mm²	White	Crankshaft Speed Sensor Return	37
				White		
108		30 turns/meter	0.50 mm²		Camshaft Speed Sensor Signal	21
107			0.50 mm²	White	Camshaft Speed Sensor Return	23
				White		
17			0.50 mm²		Fuel Temperature Sensor	47
63			0.50 mm²	White	Fuel Temperature Sensor Return	16
36			0.50 mm²	White	Fuel Rail Pressure Sensor 5v Supply	26
67			0.50 mm²	White	Crankshaft Speed Sensor Supply	13
44			0.50 mm²	White	Oil Pressure (STG)	22
45			0.50 mm²	White	Oil Pressure Switch Return	17
5			0.50 mm²	White	Coolant Temperature Sensor	9
70			0.50 mm²	White	Sensor Return #1	11
91			0.50 mm²	White	Sensor Return #2	24
38			0.50 mm²	White	Intake MAT Sensor Signal	20
69			0.50 mm²	White	5v Sensor Supply #3	14
1			0.50 mm²	White	Intake MAP Sensor Signal	35
61			0.50 mm²	White	Pre Cooler NRS Temp Sensor Signal	8
62			0.50 mm²	White	Post Cooler NRS Temp Sensor Signal	19
40			0.50 mm²	White	NRS Absolute Pressure Sensor Signal	46
15			0.50 mm²	White	NRS Delta Pressure Sensor Signal	33
90			0.50 mm²	White	Inlet Throttle Valve Return	10
2			0.50 mm²	White	Inlet Throttle Valve Position	45
89			0.50 mm²	White	Sensor Return #6	44
20			0.50 mm²	White	NRS Valve Position	31
41			0.50 mm²	White	5v Sensor Supply #1	27
21			0.50 mm²	White	Turbo Wastegate Valve Position	30
				White		
/12.E6 -X4:11			0.50 mm²		DPF Absolute Pressure Sensor Signal	18
/12.E6 -X4:20			0.50 mm²	White	DPF Delta Pressure Sensor Signal	2
/12.E6 -X4:35			0.50 mm²	White	5v Sensor Supply #6	41
				White		

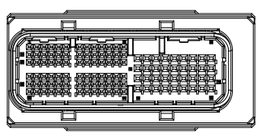

-X7#2

2303790-1

-X13#1

HDP26-24-47PE-L017

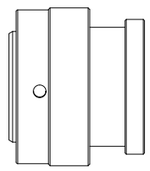

Rev	Note	Rev. date	Approved by
B		2025-09-10	

Terri 3 : Circuit Diagram

Drawing nr: 703074

Version	Current edition by	Current edition date
1	Carl	2025-09-10

TERRI FOR ALL TERRAIN

ECM Engine Interface

CIRCUIT DIAGRAM

Terri
0476-709790
www.terri.se

Approved by	
Approved date	
Designed by	CV
Date	2022-11-23

Sheet	Next	# sheets	Edition
13	14	31	B

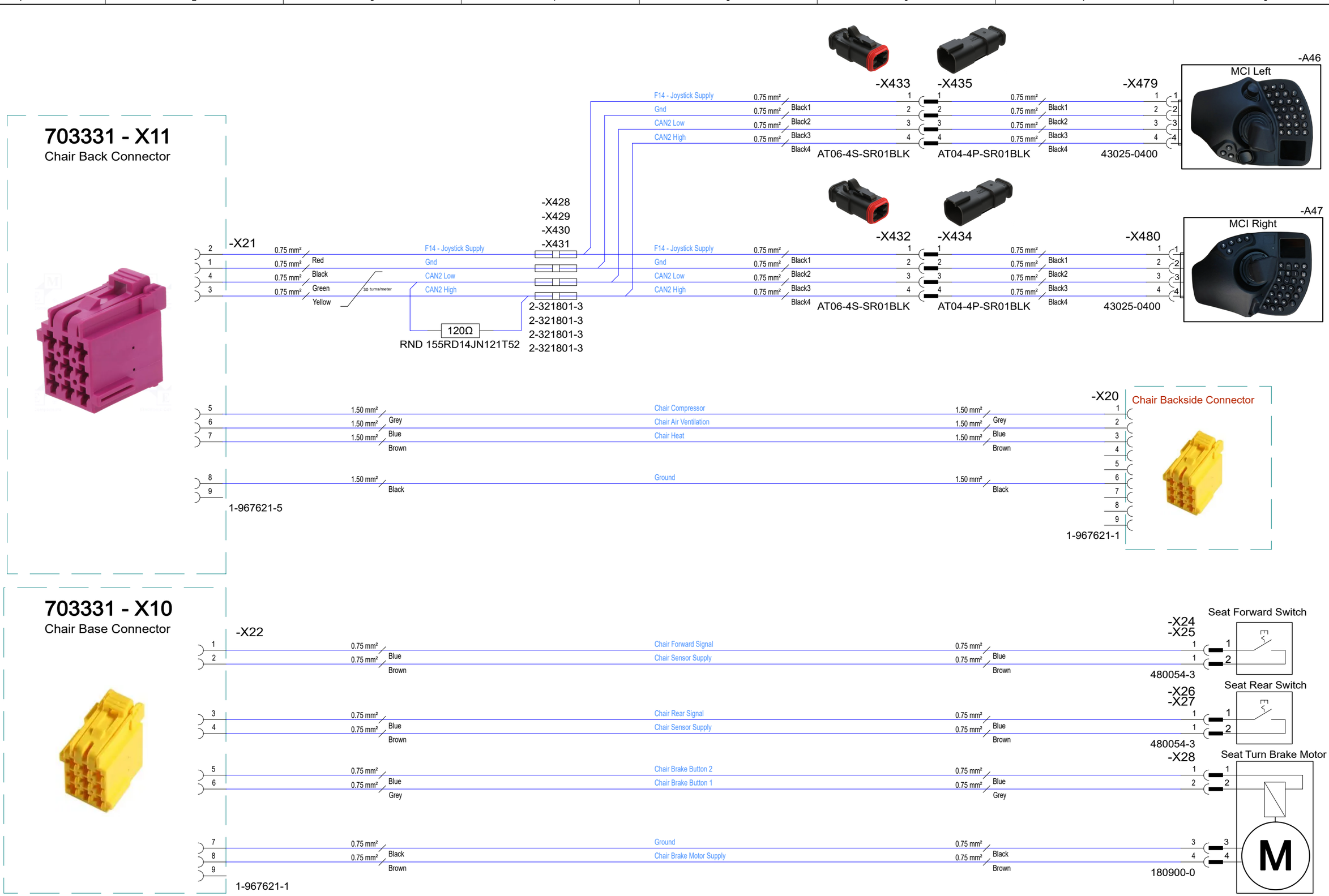

Rev	Note	Rev. date	Approved by
B		2025-09-10	

Terri 3 : Circuit Diagram

Drawing nr: 703074

Version	Current edition by	Current edition date
1	Carl	2025-09-10

TERRI FOR ALL TERRAIN

Chair

CIRCUIT DIAGRAM

Terri
0476-709790
www.terri.se

Approved by	
Approved date	
Designed by	CV
Date	2022-11-23

Sheet	Next	# sheets	Edition
14	15	31	B

703331 - X34

Hydraulic Sensors Connector

7	0.75 mm² White	Frame Lock	0.75 mm² White	-X106 1	-X66 1	0.75 mm² Brown			0.75 mm² Brown	Frame Lock	-X67 1	FL	Frame Lock
									0.75 mm² Blue	Ground	2		7072-18031-7540300
6	0.75 mm² White	Half Displacement	0.75 mm² White	2	2	0.75 mm² Brown			0.75 mm² Brown	Half Displacement	-X68 1	HD	Half Displacement
									0.75 mm² Blue	Ground	2		7072-18031-7540300
5	0.75 mm² White	Free Wheel	0.75 mm² White	3	3	0.75 mm² Brown			0.75 mm² Brown	Free Wheel	-X69 1	FW	Free Wheel
									0.75 mm² Blue	Ground	2		7072-18031-7540300
4	0.75 mm² White	Brake Front	0.75 mm² White	4	4	0.75 mm² Brown			0.75 mm² Brown	Brake Front	-X70 1	BF	Brake Front
14	0.75 mm² Black	Ground	0.75 mm² Black	6	6	1.50 mm² Black	Ground	-X73 322459	0.75 mm² Blue	Ground	2		7072-18031-7540300
3	0.75 mm² White	Brake Rear	0.75 mm² White	5	5	0.75 mm² Brown			0.75 mm² Brown	Brake Rear	-X71 1	BR	Brake Rear
									0.75 mm² Blue	Ground	2		7072-18031-7540300
4CS-GW 32 H1 OPHSP4A_01		Refill Whell Motor		-X374 H1 64319-1211	7	0.75 mm² Brown			0.75 mm² Brown	Refill Whell Motor	-X72 1	RWM	Refill Wheel Motor
									0.75 mm² Blue	Ground	2		7072-18031-7540300
13	0.75 mm² White	Ladder Up	0.75 mm² White	8	8	0.75 mm² Brown			0.75 mm² Brown	Ladder Up	-X75 1	LU	Ladder Up/Down
									0.75 mm² Blue	Ground	2		7072-18031-7540300
2	0.75 mm² White	Thermostat Cooling	0.75 mm² White	10	10	0.75 mm² Brown			0.75 mm² Brown	Thermostat Cooling	-X79 1	TC	Thermostat Cooling
15	0.75 mm² Black	Ground	0.75 mm² Black	12	12	1.50 mm² Black	Ground -X74 322459	1.50 mm² Black Ground -X105 322459	0.75 mm² Blue	Ground	2		7072-18031-7540300
4CS-GW 32 H2 OPHSP4A_02		Bypass		-X374 H2 64319-1211	9	0.75 mm² Brown			0.75 mm² Brown	Bypass	-X77 1	BP	Bypass Oil
									0.75 mm² Blue	Ground	2		7072-18031-7540300
1	0.75 mm² White	Stub Treatment	0.75 mm² White	11	11	0.75 mm² Brown			0.75 mm² Brown	Stub Treatment	-X80 1	UR	Stub Treatment
									0.75 mm² Blue	Ground	2		7072-18031-7540300
4CS-GW 32 G1 OPHSP4A_03		Pump Displacement		-X374 G1 64319-1211	13	0.75 mm² Brown			0.75 mm² Brown	Pump Displacement	-X99 1	M	Pump Displacement
16	0.75 mm² Black	Ground	0.75 mm² Black	14	14	0.75 mm² Blue			0.75 mm² Blue	Ground	2		7072-72011-7540200

5-1718323-1

5-1718321-3

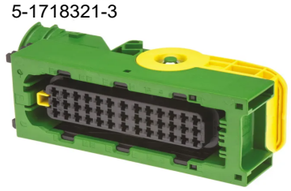

B		2025-09-10	
Rev	Note	Rev. date	Approved by

Terri 3 : Circuit Diagram

Drawing nr: 703074

Version	Current edition by	Current edition date
1	Carl	2025-09-10

TERRI FOR ALL TERRAIN

Hydraulic Valves

CIRCUIT DIAGRAM

Terri
0476-709790
www.terri.se

Approved by	
Approved date	
Designed by	CV
Date	2022-11-23

Sheet	Next	# sheets	Edition
15	16	31	B

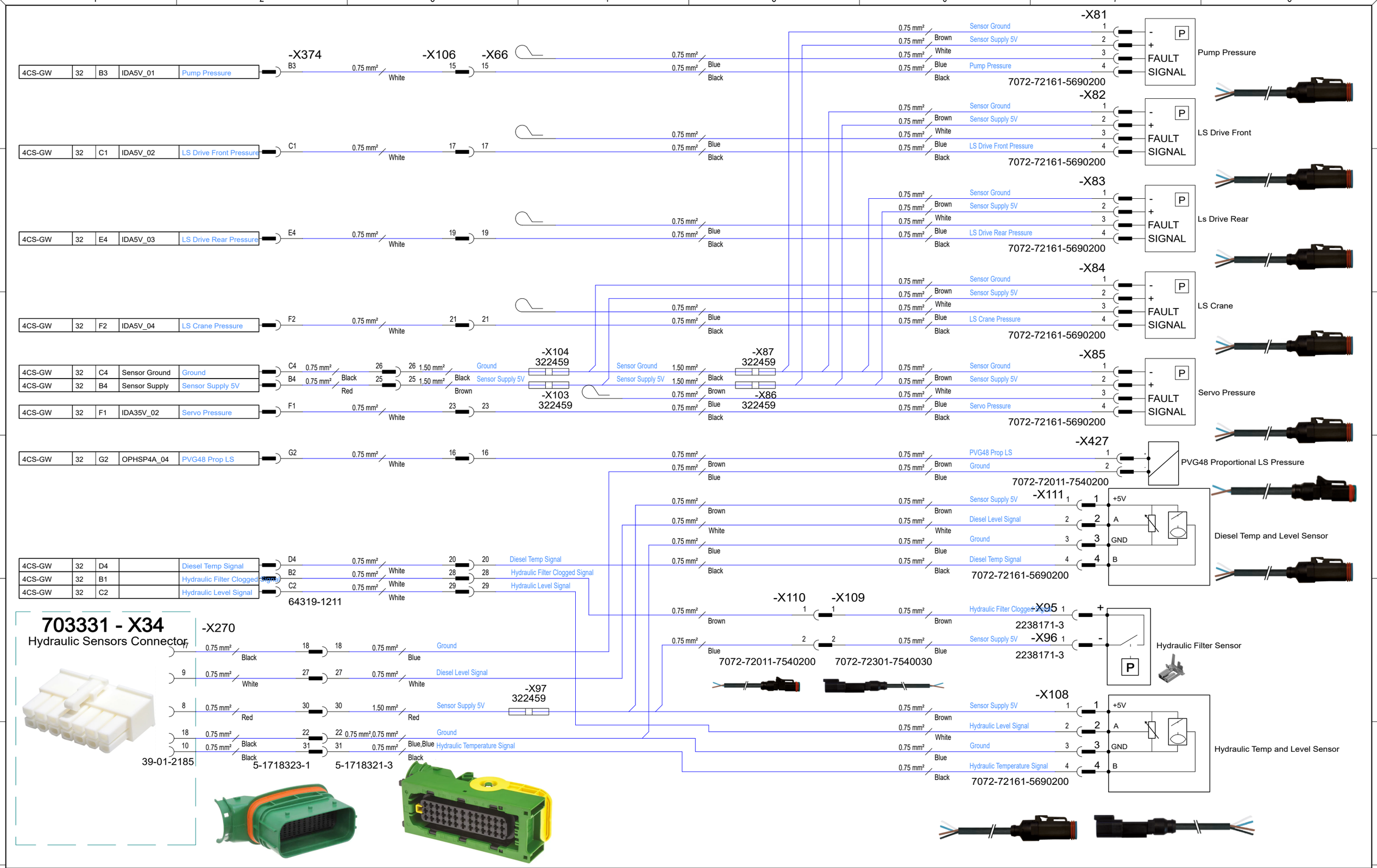

Rev	Note	Rev. date	Approved by
B		2025-09-10	

Pump Pressure

Terri 3 : Circuit Diagram

Drawing nr:703074

Version	Current edition by	Current edition date
1	Carl	2025-09-10

TERRI FOR ALL TERRAIN

Hydraulic Sensors

CIRCUIT DIAGRAM

Terri
0476-709790
www.terri.se

Approved by	
Approved date	
Designed by	CV
Date	2022-11-23

Sheet	Next	# sheets	Edition
16	17	31	B

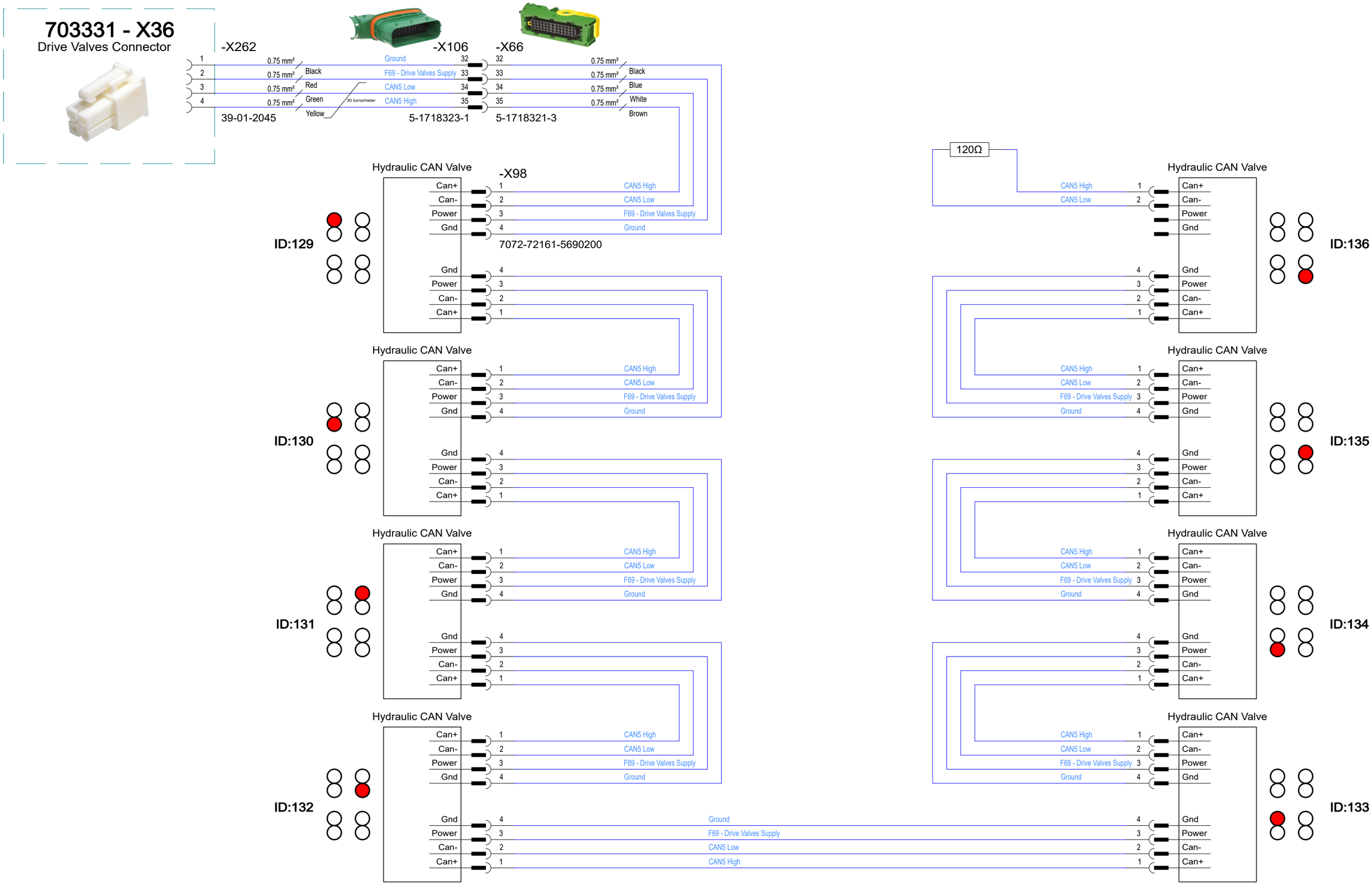

B		2025-09-10	
Rev	Note	Rev. date	Approved by

Terri 3 : Circuit Diagram

Drawing nr: 703074

Version	Current edition by	Current edition date
1	Carl	2025-09-10

TERRI FOR ALL TERRAIN

Drive Valves

CIRCUIT DIAGRAM

Terri
0476-709790
www.terri.se

Approved by	
Approved date	
Designed by	CV
Date	2022-11-23

Sheet	Next	# sheets	Edition
17	18	31	B

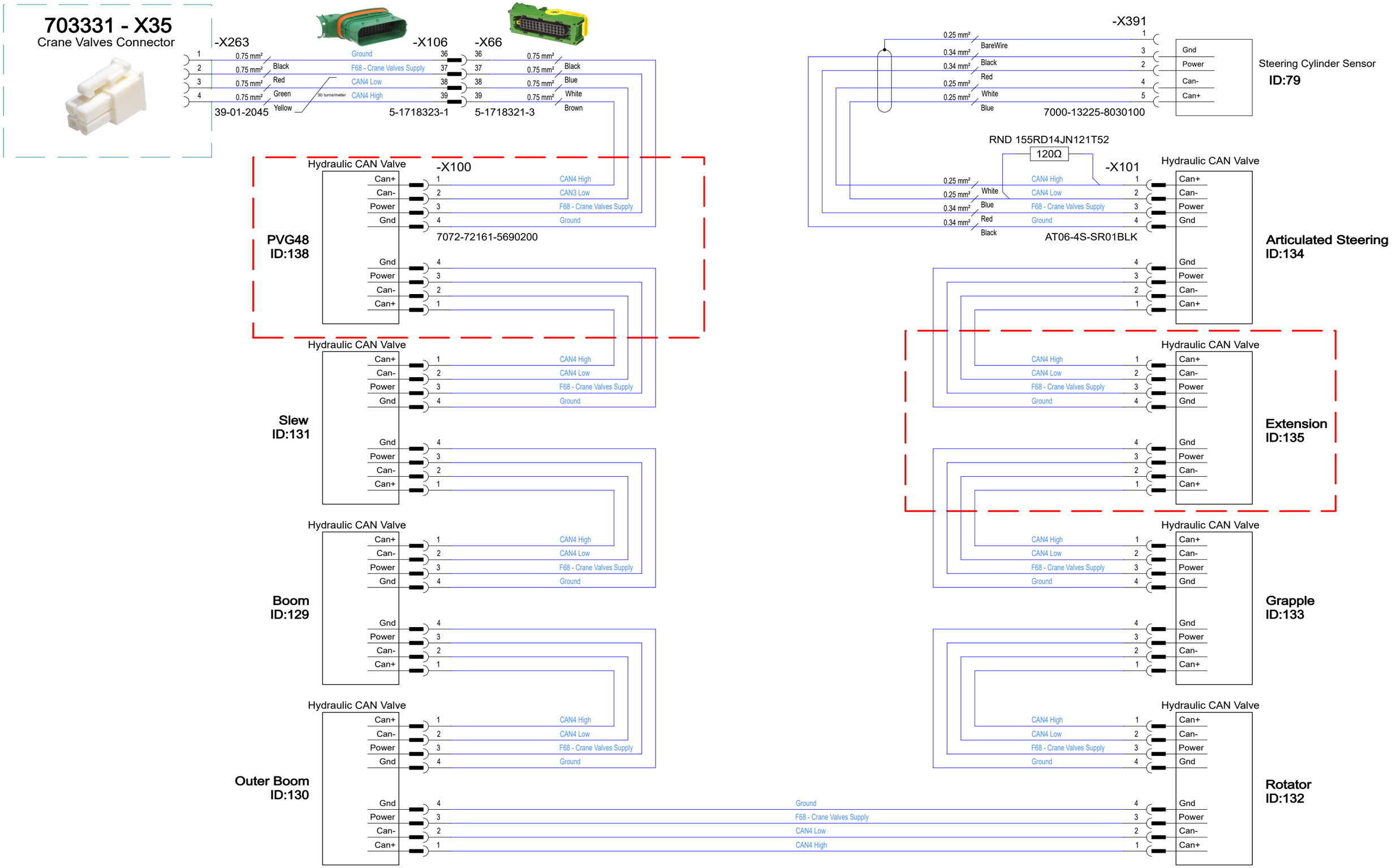

B		2025-09-10	
Rev	Note	Rev. date	Approved by

Terri 3 : Circuit Diagram

Drawing nr: 703074

Version	Current edition by	Current edition date
1	Carl	2025-09-10

TERRI FOR ALL TERRAIN

Crane Valves

CIRCUIT DIAGRAM

Terri
0476-709790
www.terri.se

Approved by	
Approved date	
Designed by	CV
Date	2022-11-23

Sheet	Next	# sheets	Edition
18	19	31	B

703331 - X18

Rear Harness Connector

B		2025-09-10	
Rev	Note	Rev. date	Approved by

Terri 3 : Circuit Diagram

Drawing nr: 703074

Version	Current edition by	Current edition date
1	Carl	2025-09-10

TERRI FOR ALL TERRAIN

Rear Connectors

CIRCUIT DIAGRAM

Terri
0476-709790
www.terri.se

Approved by	
Approved date	
Designed by	CV
Date	2022-11-23

Sheet	Next	# sheets	Edition
19	20	31	B

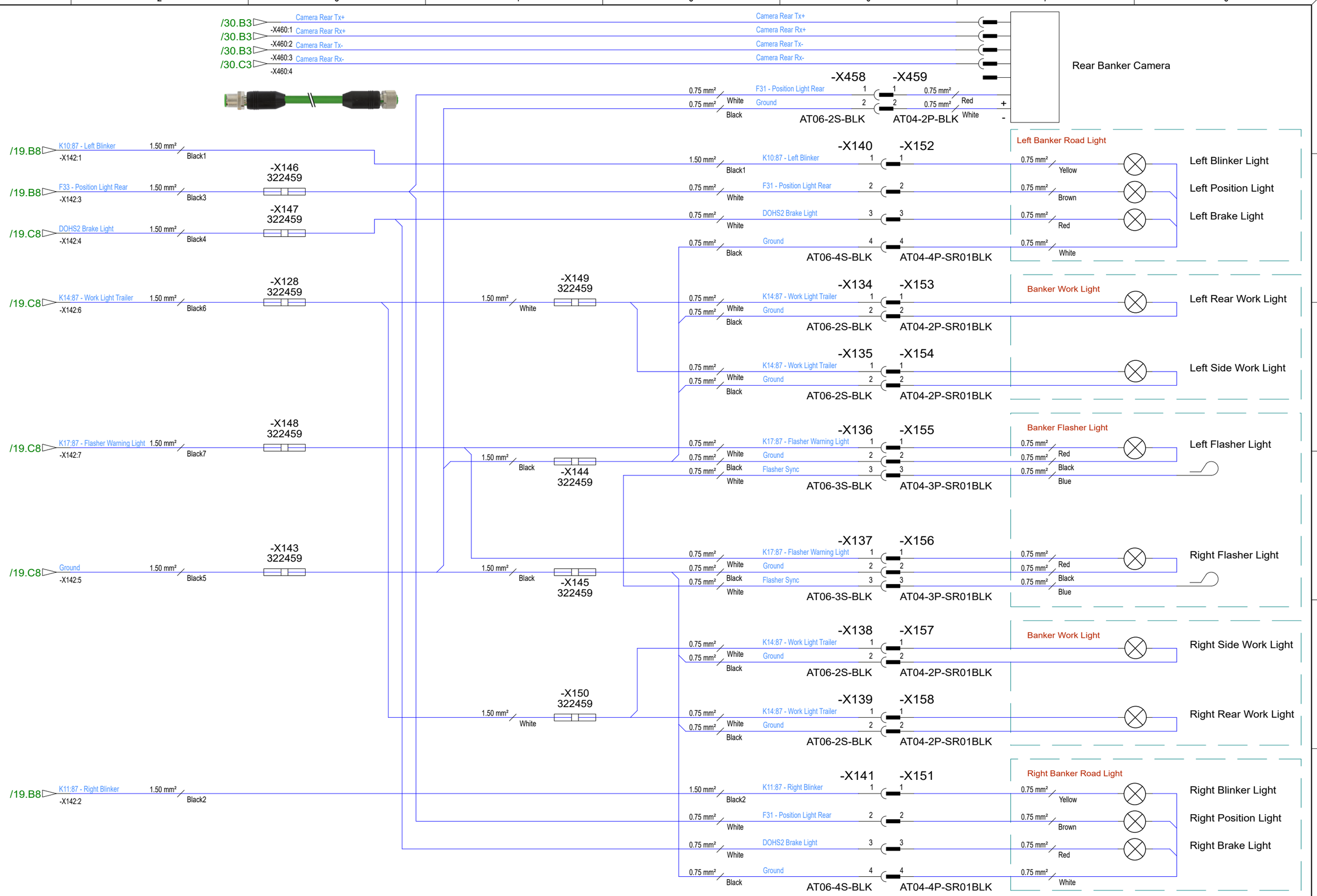

B		2025-09-10	
Rev	Note	Rev. date	Approved by

Terri 3 : Circuit Diagram

Drawing nr: 703074

Version	Current edition by	Current edition date
1	Carl	2025-09-10

TERRI FOR ALL TERRAIN

Banker

CIRCUIT DIAGRAM

Terri
0476-709790
www.terri.se

Approved by	
Approved date	
Designed by	CV
Date	2022-11-23

Sheet	Next	# sheets	Edition
20	21	31	B

703331 - X16

Condensor Unit Connector

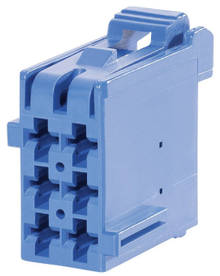

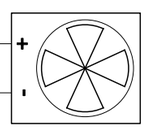

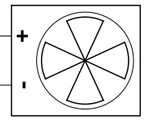

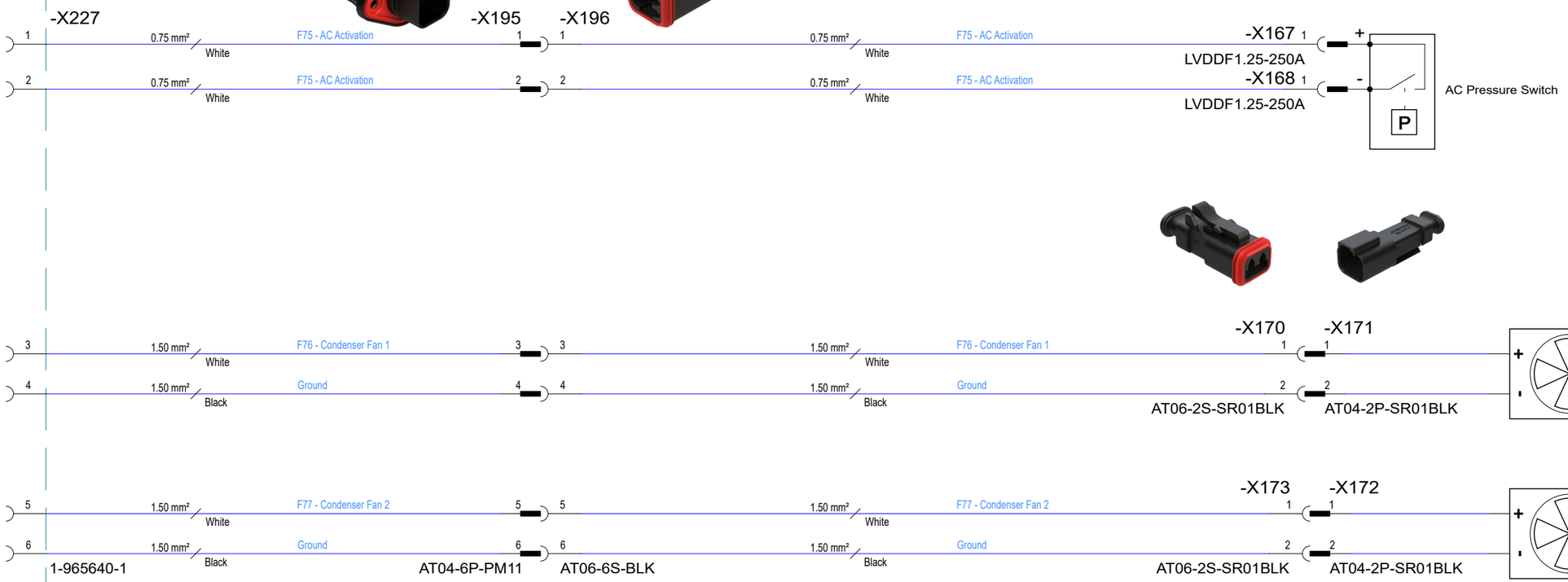

Rev	Note	Rev. date	Approved by
B		2025-09-10	

Terri 3 : Circuit Diagram

Drawing nr: 703074

Version	Current edition by	Current edition date
1	Carl	2025-09-10

TERRI FOR ALL TERRAIN

AC Condenser

CIRCUIT DIAGRAM

Terri
0476-709790
www.terri.se

Approved by	
Approved date	
Designed by	CV
Date	2022-11-23

Sheet	Next	# sheets	Edition
21	22	31	B

703331 - X17

Front Harness Connector

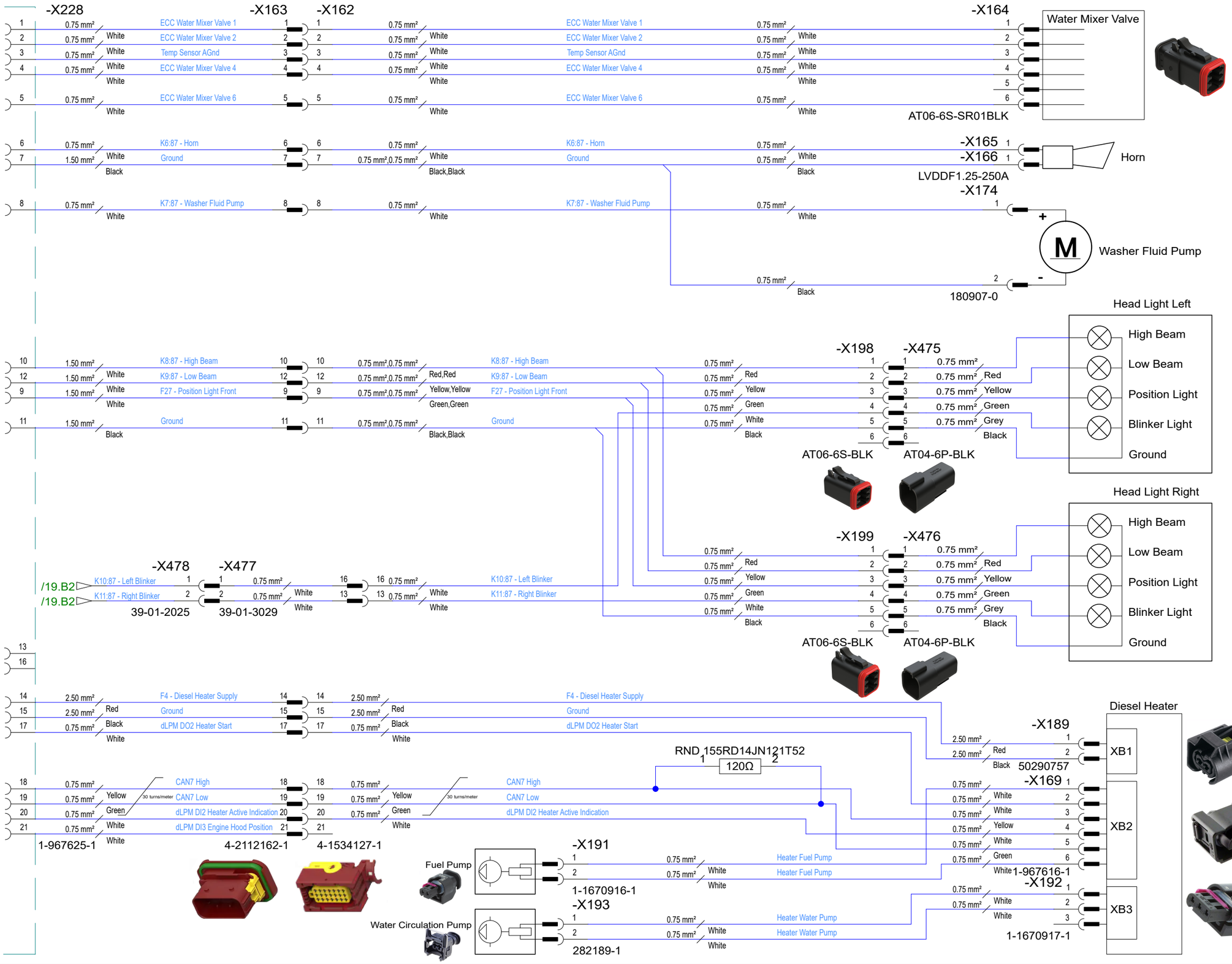

B		2025-09-10	
Rev	Note	Rev. date	Approved by

Terri 3 : Circuit Diagram

Drawing nr:703074

Version	Current edition by	Current edition date
1	Carl	2025-09-10

TERRI FOR ALL TERRAIN

Front Lights

CIRCUIT DIAGRAM

Terri
0476-709790
www.terri.se

Approved by	
Approved date	
Designed by	CV
Date	2022-11-23

Sheet	Next	# sheets	Edition
22	23	31	B

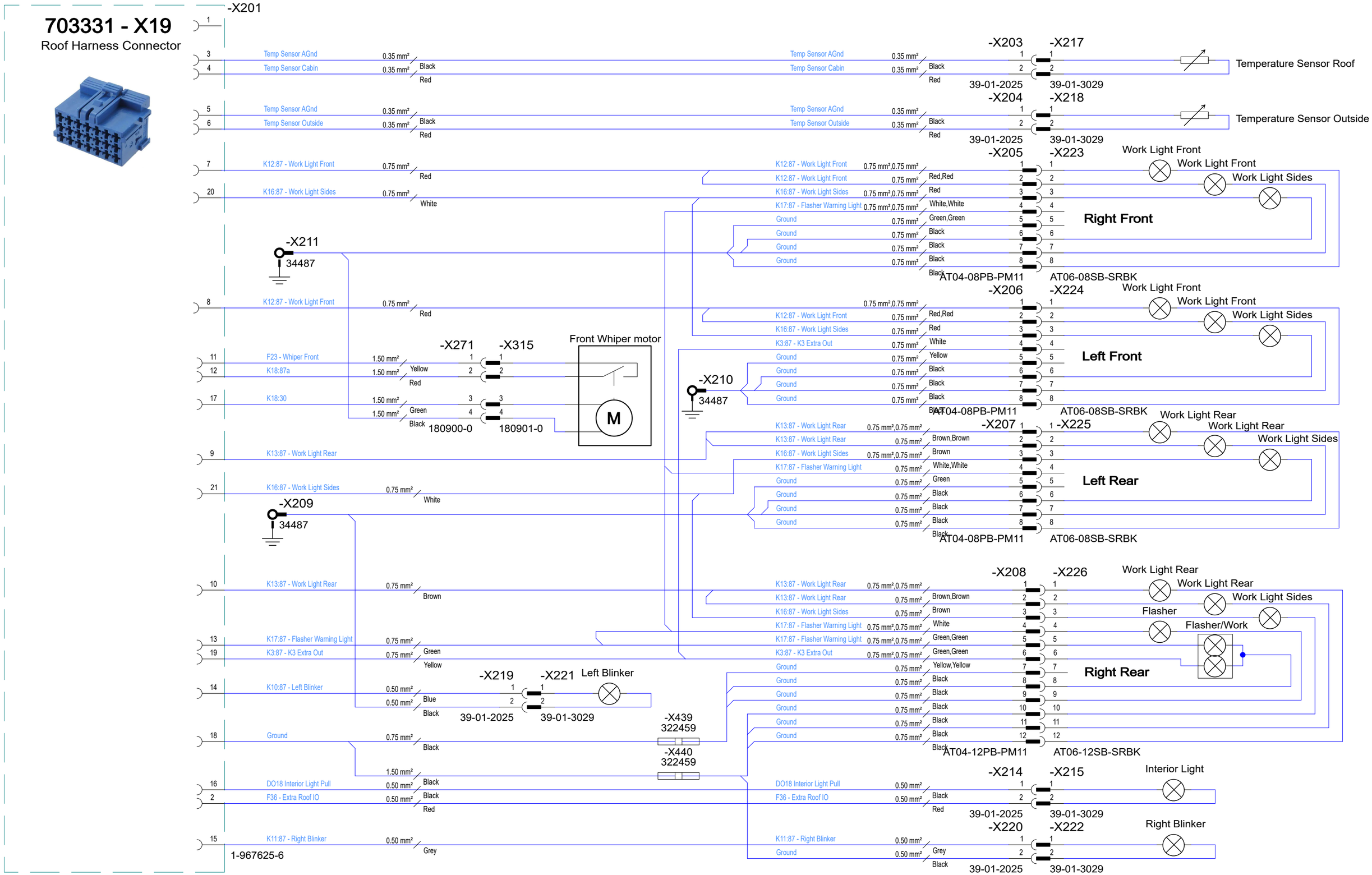

Terri 3 : Circuit Diagram

Drawing nr: 703074

Rev	Note	Rev. date	Approved by
B		2025-09-10	

Version	Current edition by	Current edition date
1	Carl	2025-09-10

TERRI FOR ALL TERRAIN

Roof

CIRCUIT DIAGRAM

Terri
0476-709790
www.terri.se

Approved by	
Approved date	
Designed by	CV
Date	2022-11-23

Sheet	Next	# sheets	Edition
23	24	31	B

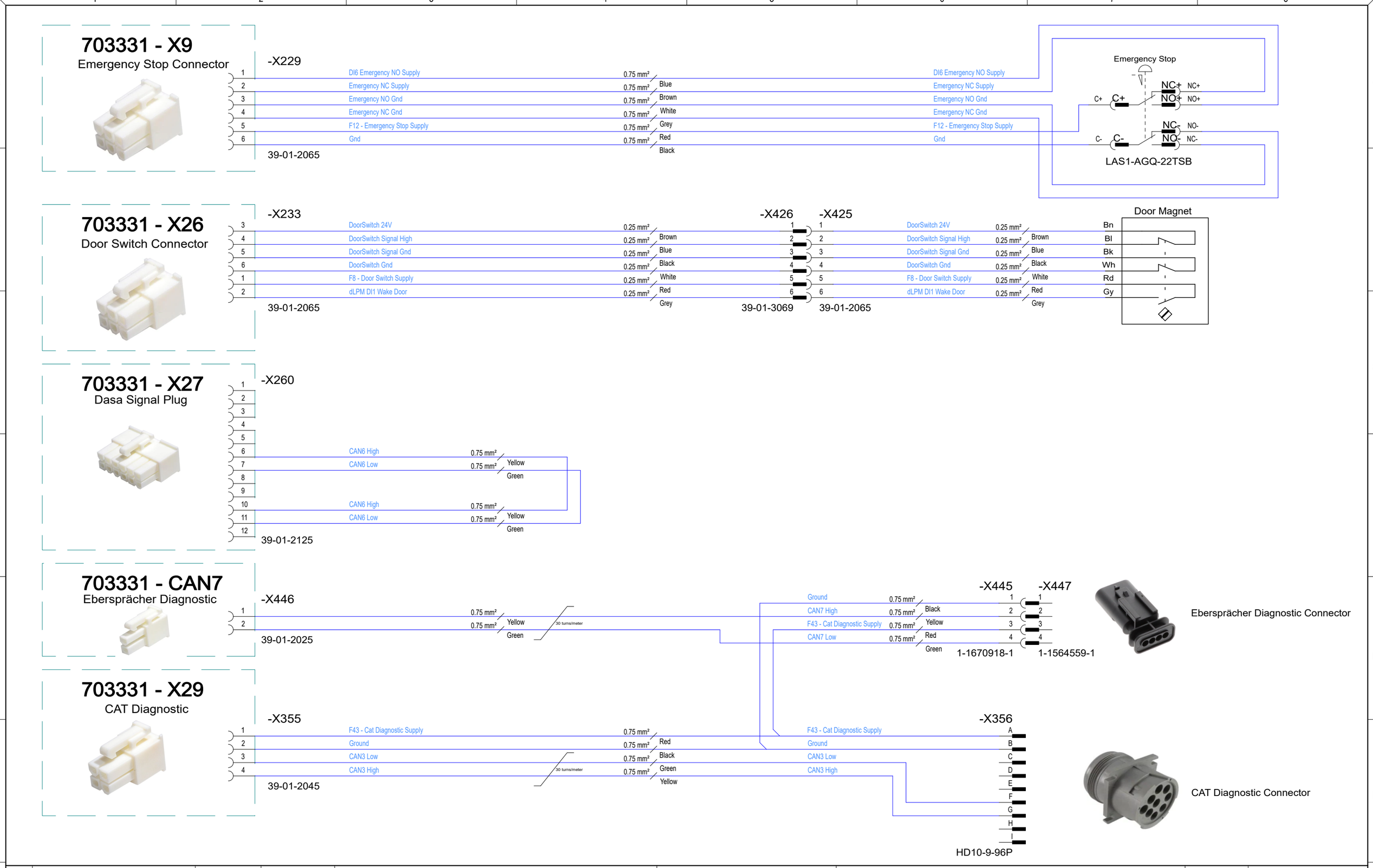

Rev	Note	Rev. date	Approved by
B		2025-09-10	

Terri 3 : Circuit Diagram

Drawing nr: 703074

Version	Current edition by	Current edition date
1	Carl	2025-09-10

TERRI FOR ALL TERRAIN

Accessory Functions

CIRCUIT DIAGRAM

Terri
0476-709790
www.terri.se

Approved by	
Approved date	
Designed by	CV
Date	2022-11-23

Sheet	Next	# sheets	Edition
24	25	31	B

703331 - X13

ECC J2 Connector

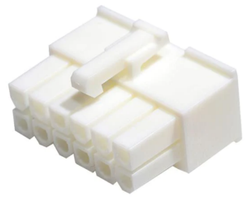

-X239				-X238
1	0.50 mm²	AC Activation K5 Pull	0.50 mm²	4
2	0.50 mm² White	Blower Power K4 Push	0.50 mm² White	17
3	0.50 mm² White	ECC Water Mixer Valve 6	0.50 mm² White	15
4	0.50 mm² White	ECC Water Mixer Valve 4	0.50 mm² White	6
5	0.50 mm² White	Recirc Motor -	0.50 mm² White	16
6	0.50 mm² White	Recirc Motor +	0.50 mm² White	5
7	0.50 mm² White	CAN8 High	0.50 mm² White	21
8	0.50 mm² Yellow / Green	CAN8 Low (30 turns/meter)	0.50 mm² Yellow / Green	22
39-01-2085				43025-2200

703331 - X14

ECC J3 Connector

-X240				-X237
1	0.50 mm²	Temp Sensor Mixed Air	0.50 mm²	14
2	0.50 mm² White	Temp Sensor Outside	0.50 mm² White	13
3	0.50 mm² White	Temp Sensor Cabin	0.50 mm² White	2
4	0.50 mm² White	Temp Sensor AGnd	0.50 mm² White	1
5	0.50 mm² Black	0-5V Fan Speed Signal	0.50 mm² Black	22
6	0.50 mm² White	dLPM DI2 Heater Active Indication	0.50 mm² White	20
7	0.50 mm² White	F26 - ECC Supply	0.50 mm² White	24
8	0.50 mm² Red	Ground	0.50 mm² Red	21
9	0.50 mm² Black / Red	F29 - ECC Ignition	0.50 mm² Black / Red	23
10				
11	0.50 mm²	ECC Water Mixer Valve 2	0.50 mm²	16
12	0.50 mm² White / White	ECC Water Mixer Valve 1	0.50 mm² White / White	4
39-01-2125				43025-2400

703331 - X15

AC Unit Connector

-X243				-X244
1	1.50 mm²	F73 - Blower Fan 1	1.50 mm²	1
2	1.50 mm² Red	F74 - Blower Fan 2	1.50 mm² Red	2
3	0.50 mm² Red / White	0-5V Fan Speed Signal	0.50 mm² Red / White	3
4	1.50 mm²	F75 - AC Activation	1.50 mm²	4
5	1.50 mm² White / White	F75 - AC Activation	1.50 mm² White / White	5
6	0.50 mm²	Temp Sensor AGnd	0.50 mm²	6
7	0.50 mm² White	Temp Sensor Mixed Air	0.50 mm² White	7
8	1.50 mm² White	Ground	1.50 mm² White	8
9	1.50 mm² Black / Black	Ground	1.50 mm² Black / Black	9
10	0.50 mm² White	Recirc Motor +	0.50 mm² White	3
11	0.50 mm² White	Recirc Motor -	0.50 mm² White	4
12				
1-967622-1				PH845-07020

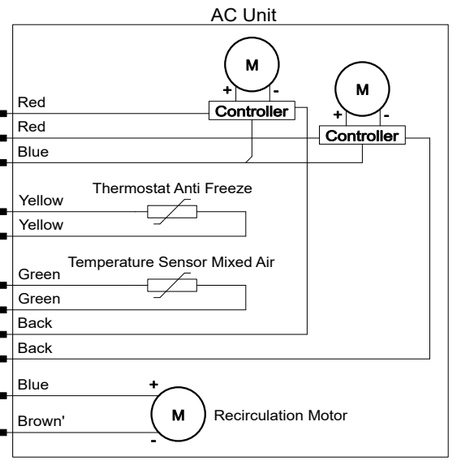

Rev	Note	Rev. date	Approved by
B		2025-09-10	

Terri 3 : Circuit Diagram

Drawing nr: 703074

Version	Current edition by	Current edition date
1	Carl	2025-09-10

FOR ALL TERRAIN

AC Unit

CIRCUIT DIAGRAM

Terri
0476-709790
www.terri.se

Approved by	
Approved date	
Designed by	CV
Date	2022-11-23

Sheet	Next	# sheets	Edition
25	26	31	B

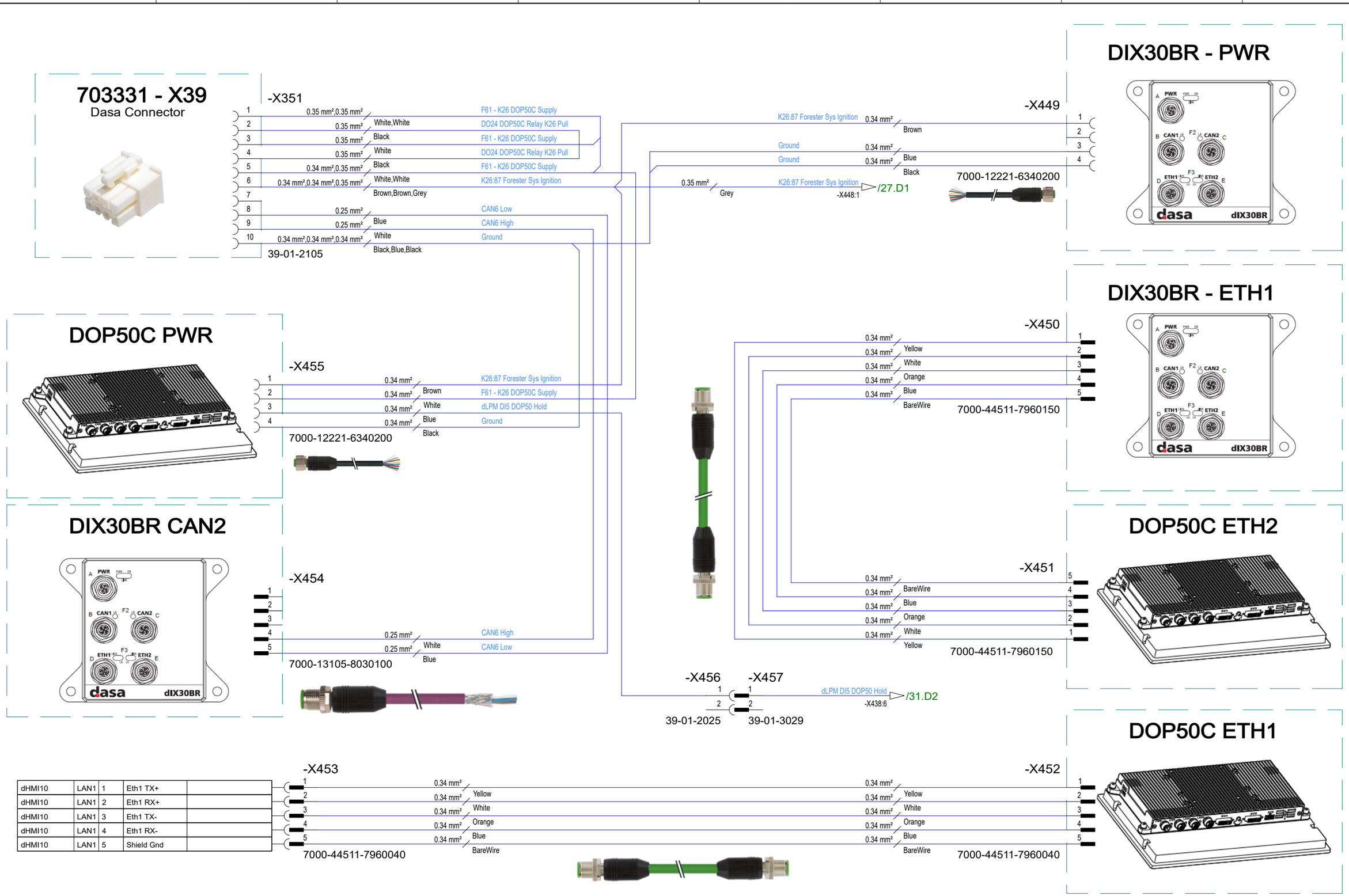

Rev	Note	Rev. date	Approved by
B		2025-09-10	

Terri 3 : Circuit Diagram

Drawing nr: 703074

Version	Current edition by	Current edition date
1	Carl	2025-09-10

TERRI FOR ALL TERRAIN

Dasa Forester

CIRCUIT DIAGRAM

Terri
0476-709790
www.terri.se

Approved by	
Approved date	
Designed by	CV
Date	2022-11-23

Sheet	Next	# sheets	Edition
26	27	31	B

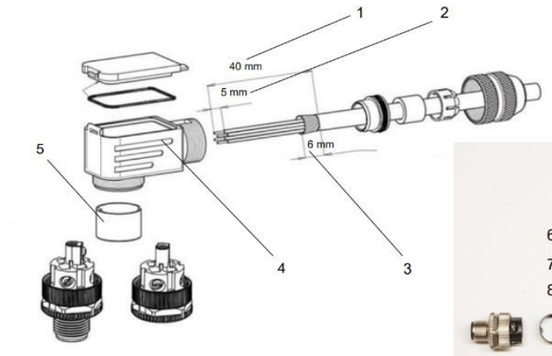

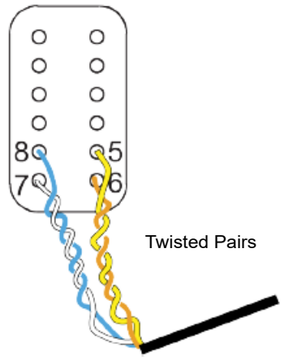

DIX30BR - ETH2

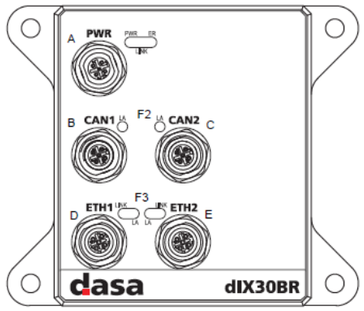

-X465

7000-14581-0000000

1	1	Eth Tx+	0.34 mm²	Yellow
2	2	Eth Rx+	0.34 mm²	White
3	3	Eth Tx-	0.34 mm²	Orange
4	4	Eth Rx-	0.34 mm²	Blue
5	5			

-X464 -X466 -X463

0.34 mm²	Yellow	1	1	0.34 mm²	Yellow	Eth Tx+	5
0.34 mm²	White	2	2	0.34 mm²	White	Eth Rx+	7
0.34 mm²	Blue	3	3	0.34 mm²	Blue	Eth Rx-	8
1.50 mm²	Orange	4	4	0.34 mm²	Orange	Eth Tx-	6
1.50 mm²	Brown	5	5	1.50 mm²	Brown	K21 Head Power	1
1.50 mm²	Blue	6	6	1.50 mm²	Blue	K22 Head Power	2
1.50 mm²	Grey	7	7	1.50 mm²	Grey	K26:87 Forester Sys Ignition	4
1.50 mm²	Black	8	8	1.50 mm²	Black	Ground	11
	Green-Yellow	9	9		Green-Yellow	Ground	12

ZK7208-3400-A100 ZK7208-3100-A050 AT06-12SB-SRBK

DIX30C - D

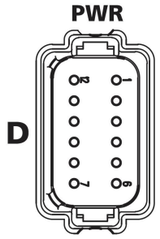

-X448 -X462

/26.B5	-X351:6	K26:87 Forester Sys Ignition	1	1	1.50 mm²
/19.E3	-X234:17	K21 Head Power	2	2	1.50 mm² Grey
/19.E3	-X234:18	K22 Head Power	3	3	1.50 mm² Brown
/19.E3	-X234:21	Ground	4	4	1.50 mm² Blue
/19.E3	-X234:19	Ground	5	5	1.50 mm² Black
			6	6	Green-Yellow

AT04-6P-BLK AT06-6S-BLK

B		2025-09-10		
Rev	Note	Rev. date	Approved by	

Terri 3 : Circuit Diagram

Drawing nr:703074

Version	Current edition by	Current edition date
1	Carl	2025-09-10

TERRI FOR ALL TERRAIN

Crane Cable

Terri
0476-709790
www.terri.se

Approved by	
Approved date	
Designed by	CV
Date	2022-11-23

Sheet	Next	# sheets	Edition
27	28	31	B

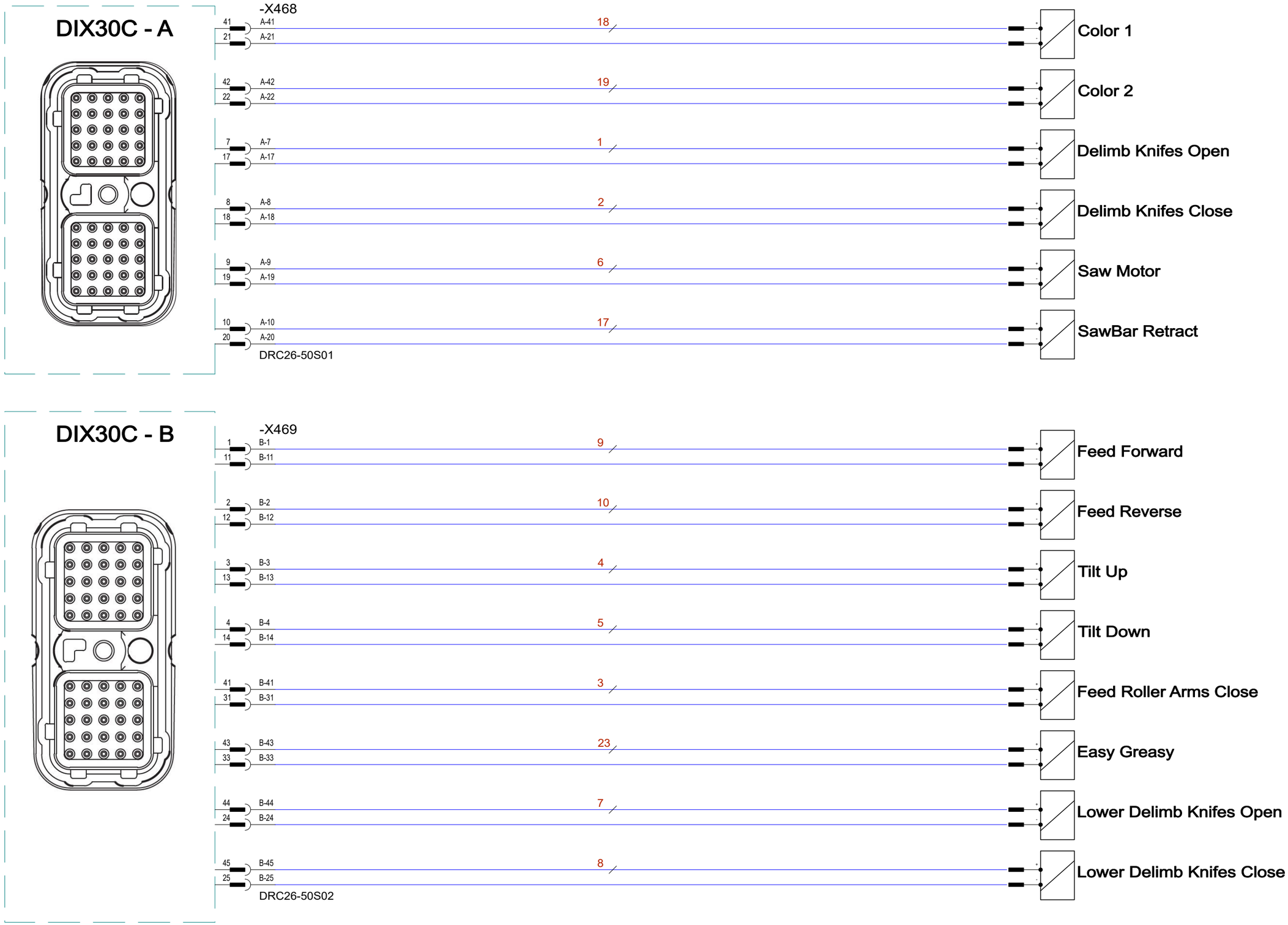

Rev	Note	Rev. date	Approved by
B		2025-09-10	

Terri 3 : Circuit Diagram

Drawing nr: 703074

Version	Current edition by	Current edition date
1	Carl	2025-09-10

TERRI FOR ALL TERRAIN

2000T Head 1

CIRCUIT DIAGRAM

Terri
0476-709790
www.terri.se

Approved by	
Approved date	
Designed by	CV
Date	2022-11-23

Sheet	Next	# sheets	Edition
28	29	31	B

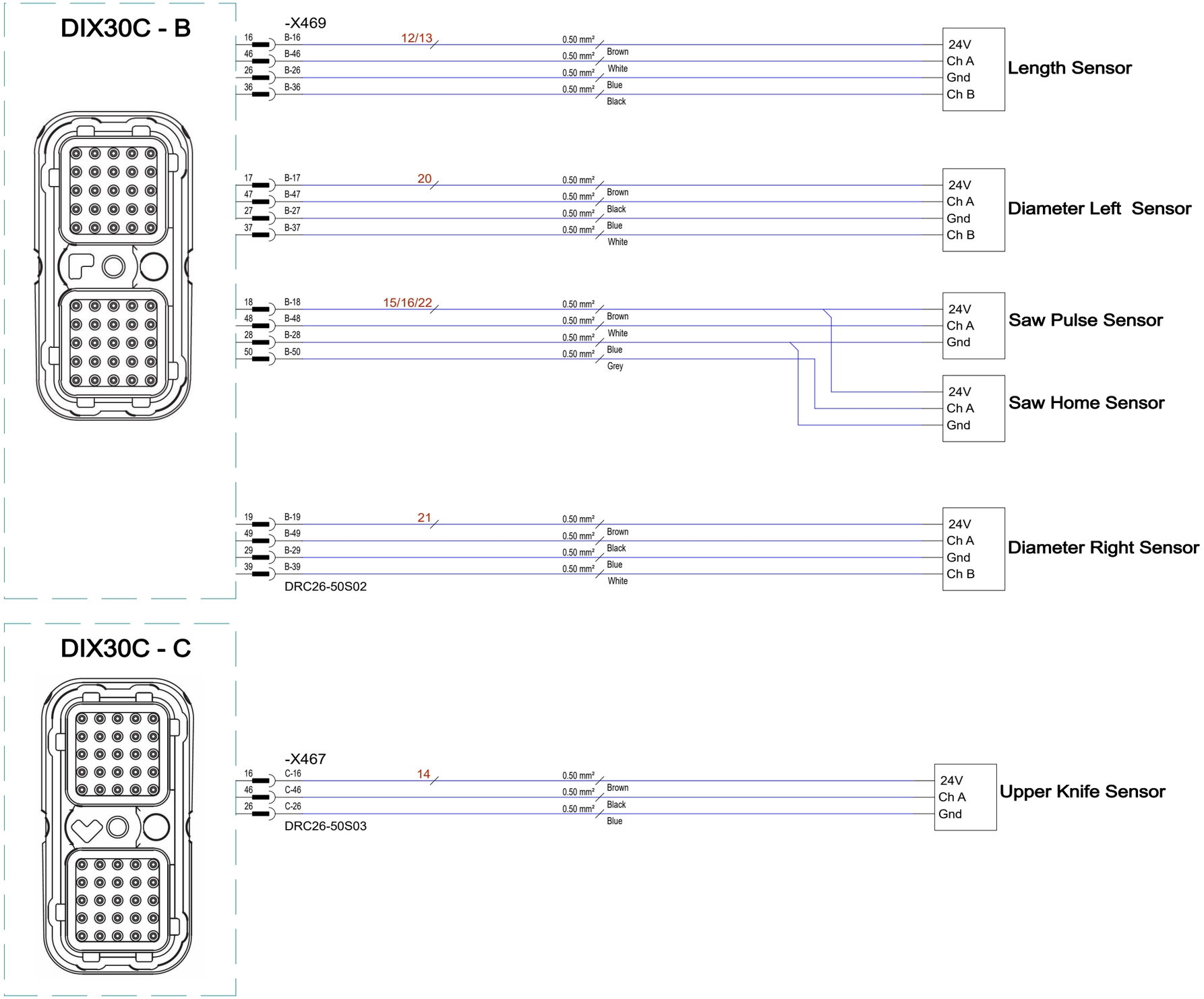

Rev	Note	Rev. date	Approved by
B		2025-09-10	

Terri 3 : Circuit Diagram

Drawing nr: 703074

Version	Current edition by	Current edition date
1	Carl	2025-09-10

TERRI FOR ALL TERRAIN

2000T Head 2

CIRCUIT DIAGRAM

Terri
0476-709790
www.terri.se

Approved by	
Approved date	
Designed by	CV
Date	2022-11-23

Sheet	Next	# sheets	Edition
29	30	31	B

-X361

7000-14541-7940200

dHMI10	LAN2	1	Eth2 TX+	Display Ethernet Tx+	1	0.34 mm²		Display Ethernet Tx+	E4	Display Ethernet Tx+	ETH1_P1_Rx+	E4	48	4CS-GW
dHMI10	LAN2	2	Eth2 RX+	Display Ethernet Rx+	2	0.34 mm²	Yellow	Display Ethernet Rx+	C4	Display Ethernet Rx+	ETH1_P1_Tx+	C4	48	4CS-GW
dHMI10	LAN2	3	Eth2 TX-	Display Ethernet Tx-	3	0.34 mm²	White	Display Ethernet Tx-	F4	Display Ethernet Tx-	ETH1_P1_Rx-	F4	48	4CS-GW
dHMI10	LAN2	4	Eth2 RX-	Display Ethernet Rx-	4	0.34 mm²	Orange	Display Ethernet Rx-	D4	Display Ethernet Rx-	ETH1_P1_Tx-	D4	48	4CS-GW
dHMI10	LAN2	5	Shield Gnd		5		Blue							

-X369 / -X368 / -X365

1-963449-2

7000-14541-7940250 7000-14641-7940050

TCG4		29	ETH Tx+	Telematic Ethernet Tx+	29	0.34 mm²		1	1	0.34 mm²		Telematic Ethernet Tx+	D1	Telematic Ethernet Tx+	ETH1_P3_Rx+	D1	48	4CS-GW
TCG4		27	ETH Rx+	Telematic Ethernet Rx+	27	0.34 mm²	Yellow	2	2	0.34 mm²	Yellow	Telematic Ethernet Rx+	F1	Telematic Ethernet Rx+	ETH1_P3_Tx+	F1	48	4CS-GW
TCG4		28	ETH Tx-	Telematic Ethernet Tx-	28	0.34 mm²	White	3	3	0.34 mm²	White	Telematic Ethernet Tx-	C1	Telematic Ethernet Tx-	ETH1_P3_Rx-	C1	48	4CS-GW
TCG4		26	ETH Rx-	Telematic Ethernet Rx-	26	0.34 mm²	Orange	4	4	0.34 mm²	Orange	Telematic Ethernet Rx-	E1	Telematic Ethernet Rx-	ETH1_P3_Tx-	E1	48	4CS-GW
							Blue	5	5		Blue							

-X460 / -X364

7000-44571-7961000 7000-14641-7940050

/20.A3	Camera Rear Tx+	1	1	0.34 mm²		Camera Rear Tx+	H1	Camera Rear Tx+	ETH1_P2_Rx+	H1	48	4CS-GW
/20.A3	Camera Rear Rx+	2	2	0.34 mm²	Yellow	Camera Rear Rx+	K1	Camera Rear Rx+	ETH1_P2_Tx+	K1	48	4CS-GW
/20.A3	Camera Rear Tx-	3	3	0.34 mm²	White	Camera Rear Tx-	G1	Camera Rear Tx-	ETH1_P2_Rx-	G1	48	4CS-GW
/20.A3	Camera Rear Rx-	4	4	0.34 mm²	Orange	Camera Rear Rx-	J1	Camera Rear Rx-	ETH1_P2_Tx-	J1	48	4CS-GW
		5	5		Blue							

-X383 / -X366

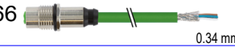

7000-44571-7960250 7000-14641-7940200

/35.F4 -X384:1	Camera Roof Front Tx+	1	1	0.34 mm²		Camera Roof Front Tx+	K2	Camera Roof Front Tx+	ETH1_P4_Rx+	K2	48	4CS-GW
/35.F4 -X384:2	Camera Roof Front Rx+	2	2	0.34 mm²	Yellow	Camera Roof Front Rx+	J3	Camera Roof Front Rx+	ETH1_P4_Tx+	J3	48	4CS-GW
/35.F4 -X384:3	Camera Roof Front Tx-	3	3	0.34 mm²	White	Camera Roof Front Tx-	J2	Camera Roof Front Tx-	ETH1_P4_Rx-	J2	48	4CS-GW
/35.F4 -X384:4	Camera Roof Front Rx-	4	4	0.34 mm²	Orange	Camera Roof Front Rx-	K3	Camera Roof Front Rx-	ETH1_P4_Tx-	K3	48	4CS-GW
		5	5		Blue							

703331 - X42

Main Controller Connector

-X273

1-967625-2

5	Ground		1.50 mm²		Ground	M1	Ground	Ground	M1	48	4CS-GW
10	F49 - Power Supply 1		1.50 mm²	Black	F49 - Power Supply 1	M2	F49 - Power Supply 1	+UB	M2	48	4CS-GW
13	F48 - CPU Supply		1.50 mm²	Red	F48 - CPU Supply	M3	F48 - CPU Supply	+UE	M3	48	4CS-GW
14	dLPM DO3 Controller Ignition		1.50 mm²	Red	dLPM DO3 Controller Ignition	M4	dLPM DO3 Controller Ignition	KL15	M4	48	4CS-GW
				White							
4	CAN2 Low		0.75 mm²		CAN2 Low	A1	CAN2 Low	CAN2_L	A1	48	4CS-GW
7	CAN2 High	30 turns/meter	0.75 mm²	Green	CAN2 High	A2	CAN2 High	CAN2_H	A2	48	4CS-GW
18	CAN1 Low		0.75 mm²	Yellow	CAN1 Low	A3	CAN1 Low	CAN1_L	A3	48	4CS-GW
21	CAN1 High	30 turns/meter	0.75 mm²	Green	CAN1 High	A4	CAN1 High	CAN1_H	A4	48	4CS-GW
3	CAN6 Low		0.75 mm²	Yellow	CAN6 Low	C2	CAN6 Low	CAN6_L	C2	48	4CS-GW
6	CAN6 High	30 turns/meter	0.75 mm²	Green	CAN6 High	D2	CAN6 High	CAN6_H	D2	48	4CS-GW
8	CAN4 Low		0.75 mm²	Yellow	CAN4 Low	E3	CAN4 Low	CAN4_L	E3	48	4CS-GW
9	CAN4 High	30 turns/meter	0.75 mm²	Green	CAN4 High	F3	CAN4 High	CAN4_H	F3	48	4CS-GW
15	CAN5 Low		0.75 mm²	Yellow	CAN5 Low	G2	CAN5 Low	CAN5_L	G2	48	4CS-GW
12	CAN5 High	30 turns/meter	0.75 mm²	Green	CAN5 High	H2	CAN5 High	CAN5_H	H2	48	4CS-GW
20	CAN3 Low		0.75 mm²	Yellow	CAN3 Low	G3	CAN3 Low	CAN3_L	G3	48	4CS-GW
19	CAN3 High	30 turns/meter	0.75 mm²	Green	CAN3 High	H3	CAN3 High	CAN3_H	H3	48	4CS-GW
11	Ground		0.75 mm²	Yellow	Ground						
				Black							

64320-1319

34113 -X363

4CS-GW Chassie

Rev	Note	Rev. date	Approved by
B		2025-09-10	

Terri 3 : Circuit Diagram

Drawing nr:703074

Version	Current edition by	Current edition date
1	Carl	2025-09-10

FOR ALL TERRAIN

Controller

CIRCUIT DIAGRAM

Terri
0476-709790
www.terri.se

Approved by	
Approved date	
Designed by	CV
Date	2022-11-23

Sheet	Next	# sheets	Edition
30	31	31	B

703331 - X40
Display Connector

-X264

39-01-2065

-X370

7000-12221-6340200

5	F66 - Display Ignition	0.34 mm²		F66 - Display Ignition	1	F66 - Display Ignition	Ignition	1	PWR	dHMI10
4	F52 - Display Supply	0.34 mm²	Brown	F52 - Display Supply	2	F52 - Display Supply	Supply	2	PWR	dHMI10
		0.34 mm²	White		3			3	PWR	dHMI10
6	Ground	0.34 mm²	Blue	Ground	4	Ground	Ground	4	PWR	dHMI10
			Black							

703331 - X22
Telematic Connector

-X371

-X369

39-01-2105

RND 155RD14JN121T52 (120Ω)

RND 155RD14JN121T52 (120Ω)

RND 155RD14JN121T52 (120Ω)

1-963449-2

1	F5 - Telematic Supply	0.75 mm²		F5 - Telematic Supply	8	F5 - Telematic Supply	UB Power Supply	8		TCG4
2	Ground	0.75 mm²	Red	Ground	9	Ground	Gnd	9		TCG4
3	F22 - Telematic Ignition	0.75 mm²	Black	F22 - Telematic Ignition	10	F22 - Telematic Ignition	Ignition	10		TCG4
4			White							
5	CAN8 Low	0.75 mm²		CAN8 Low	11	CAN8 Low	CAN3 Low	11		TCG4
6	CAN8 High (30 turns/meter)	0.75 mm²	Green	CAN8 High	12	CAN8 High	CAN3 High	12		TCG4
			Yellow							
7	CAN1 High	0.75 mm²		CAN1 High	21	CAN1 High	CAN1 High	21		TCG4
8	CAN1 Low (30 turns/meter)	0.75 mm²	Yellow	CAN1 Low	20	CAN1 Low	CAN1 Low	20		TCG4
			Green							
9	CAN7 High	0.75 mm²		CAN7 High	22	CAN7 High	CAN2 Low	22		TCG4
10	CAN7 Low (30 turns/meter)	0.75 mm²	Green	CAN7 Low	23	CAN7 Low	CAN2 High	23		TCG4
			Yellow							

703331 - X41
DLPM Connector

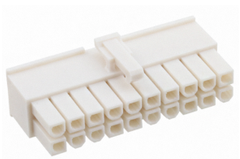

/26.E5 dLPM DI5 DOP50 Hold -X457:1

-X436

-X437
-X438

39-01-2225

DTM06-12SA
DTM06-12SB

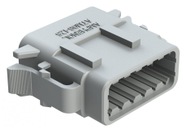

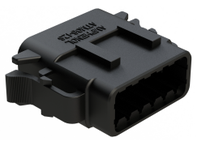

	dLPM DI5 DOP50 Hold	0.75 mm²		dLPM DI5 DOP50 Hold	6	dLPM DI5 DOP50 Hold	IN 5	B6	Black	dLPM
1	F9 - dLPM Supply	0.75 mm²	White	F9 - dLPM Supply	10	F9 - dLPM Supply	Supply	B10	Black	dLPM
2	Ground	0.75 mm²	Red	Ground	9	Ground	Ground	B9	Black	dLPM
3	CAN1 High (30 turns/meter)	0.75 mm²	Black	CAN1 High	1	CAN1 High	Can H	B1	Black	dLPM
4	CAN1 Low	0.75 mm²	Yellow	CAN1 Low	12	CAN1 Low	Can L	B12	Black	dLPM
5	dLPM DI1 Wake Door	0.75 mm²	Green	dLPM DI1 Wake Door	2	dLPM DI1 Wake Door	IN 1	B2	Black	dLPM
6	dLPM DO1 K1 MSW Push	0.75 mm²	White	dLPM DO1 K1 MSW Push	1	dLPM DO1 K1 MSW Push	DO 1	A1	Grey	dLPM
7	dLPM DO2 Heater Start	0.75 mm²	White	dLPM DO2 Heater Start	2	dLPM DO2 Heater Start	DO 2	A2	Grey	dLPM
8	dLPM DO7 Machine Illumination Pull	0.75 mm²	White	dLPM DO7 Machine Illumination Pull	11	dLPM DO7 Machine Illumination Pull	DO 7 Pull	A11	Grey	dLPM
9	dLPM DI2 Heater Active Indication	0.75 mm²	White	dLPM DI2 Heater Active Indication	3	dLPM DI2 Heater Active Indication	IN 2	B3	Black	dLPM
10	dLPM DO8 Machine Blink Pull	0.75 mm²	White	dLPM DO8 Machine Blink Pull	12	dLPM DO8 Machine Blink Pull	DO 8 Pull	A12	Grey	dLPM
11	dLPM DI3 Engine Hood Position	0.75 mm²	White	dLPM DI3 Engine Hood Position	4	dLPM DI3 Engine Hood Position	IN 3	B4	Black	dLPM
12	dLPM DO3 Controller Ignition	0.75 mm²	White	dLPM DO3 Controller Ignition	3	dLPM DO3 Controller Ignition	DO 3	A3	Grey	dLPM
13	dLPM DO4 Frame Lock	0.75 mm²	White	dLPM DO4 Frame Lock	4	dLPM DO4 Frame Lock	DO 4	A4	Grey	dLPM
14	dLPM DO5 Half Displacement	0.75 mm²	White	dLPM DO5 Half Displacement	9	dLPM DO5 Half Displacement	DO 5	A9	Grey	dLPM
15	dLPM DO6 Free Wheel	0.75 mm²	White	dLPM DO6 Free Wheel	10	dLPM DO6 Free Wheel	DO 6	A10	Grey	dLPM
16	dLPM PWM1 Brake Front	0.75 mm²	White	dLPM PWM1 Brake Front	5	dLPM PWM1 Brake Front	PWM 1	A5	Grey	dLPM
17	dLPM PWM2 Brake Rear	0.75 mm²	White	dLPM PWM2 Brake Rear	6	dLPM PWM2 Brake Rear	PWM 2	A6	Grey	dLPM
18	dLPM PWM3 Thermostat	0.75 mm²	White	dLPM PWM3 Thermostat	7	dLPM PWM3 Thermostat	PWM 3	A7	Grey	dLPM
19	dLPM PWM4 Stump Treatment	0.75 mm²	White	dLPM PWM4 Stump Treatment	8	dLPM PWM4 Stump Treatment	PWM 4	A8	Grey	dLPM
20	Emergency NC Gnd	0.75 mm²	White	Emergency NC Gnd	5	Emergency NC Gnd	IN 4	B5	Black	dLPM
			Black							

Rev	Note	Rev. date	Approved by
B		2025-09-10	

Terri 3 : Circuit Diagram
Drawing nr:703074

Version	Current edition by	Current edition date
1	Carl	2025-09-10

TERRI FOR ALL TERRAIN

Display & Telematic

CIRCUIT DIAGRAM

Terri
0476-709790
www.terri.se

Approved by	
Approved date	
Designed by	CV
Date	2022-11-23

Sheet	Next	# sheets	Edition
31	32	31	B

703331 - X30
Brake Pedal Rear Connector

-X276

Pin	Signal	Wire	Cable	Wire	Signal	Pin
1	5V Sensor Ref	0.50 mm²			5V Sensor Ref	+5V
2	Ground	0.50 mm²	Red		Ground	A (10-90%)
3	AI1 Brake Pedal Rear S1	0.50 mm²	Black		AI1 Brake Pedal Rear S1	B (90-10%)
4	AI5 Brake Pedal Rear S2	0.50 mm²	Orange		AI5 Brake Pedal Rear S2	GND
			Brown			

39-01-2045

Brake Pedal Rear

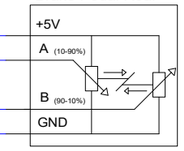

703331 - X31
Gas Pedal Rear Connector

-X278

Pin	Signal	Wire	Cable	Wire	Signal	Pin
1	5V Sensor Ref	0.50 mm²			5V Sensor Ref	+5V
2	Ground	0.50 mm²	Red		Ground	A (10-90%)
3	AI3 Gas Pedal Rear S1	0.50 mm²	Black		AI3 Gas Pedal Rear S1	B (90-10%)
4	AI7 Gas Pedal Rear S2	0.50 mm²	Orange		AI7 Gas Pedal Rear S2	GND
			Brown			

39-01-2045

Drive Pedal Rear

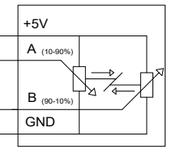

703331 - X25
Accessory Connector

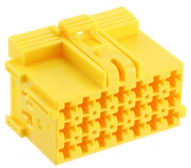

-X295 -X421 -X423

Pin	Signal	Wire	Cable	Pin	Pin	Wire	Signal	Pin
17	5V Sensor Ref	0.75 mm²		1	1	0.50 mm²	5V Sensor Ref	+5V
16	Ground	0.75 mm²	Red	2	2	0.50 mm²	Ground	A (10-90%)
14	AI4 Gas Pedal Front S1	0.75 mm²	Black	3	3	0.50 mm²	AI4 Gas Pedal Front S1	B (90-10%)
15	AI8 Gas Pedal Front S2	0.75 mm²	Orange	4	4	0.50 mm²	AI8 Gas Pedal Front S2	GND
			Brown					

39-01-2046 39-01-2045

Drive Pedal Front

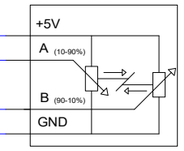

-X422 -X424

Pin	Signal	Wire	Cable	Pin	Pin	Wire	Signal	Pin
21	5V Sensor Ref	0.75 mm²		1	1	0.50 mm²	5V Sensor Ref	+5V
20	Ground	0.75 mm²	Red	2	2	0.50 mm²	Ground	A (10-90%)
18	AI2 Brake Pedal Front S1	0.75 mm²	Black	3	3	0.50 mm²	AI2 Brake Pedal Front S1	B (90-10%)
19	AI6 Brake Pedal Front S2	0.75 mm²	Orange	4	4	0.50 mm²	AI6 Brake Pedal Front S2	GND
			Brown					

1-967625-5 39-01-2046 39-01-2045

Brake Pedal Front

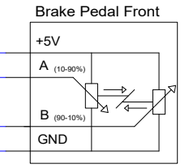

703331 - X32
Inversion Pedal Connector

-X280

Pin	Signal	Wire	Cable	Wire	Signal	Pin
1	F44 - Pedal Supply	0.75 mm²			F44 - Pedal Supply	
2	DI10 Inversion Pedal	0.75 mm²	Brown		DI10 Inversion Pedal	
			Black			

39-01-2025

Inversion Pedal

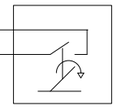

Rev	Note	Rev. date	Approved by
B		2025-09-10	

Terri 3 : Circuit Diagram
Drawing nr:703074

Version	Current edition by	Current edition date
1	Carl	2025-09-10

FOR ALL TERRAIN

Pinouts Circuit Diagram

CIRCUIT DIAGRAM

Terri
0476-709790
www.terri.se

Approved by	
Approved date	
Designed by	CV
Date	2022-11-23

Sheet	Next	# sheets	Edition
32	33	31	B

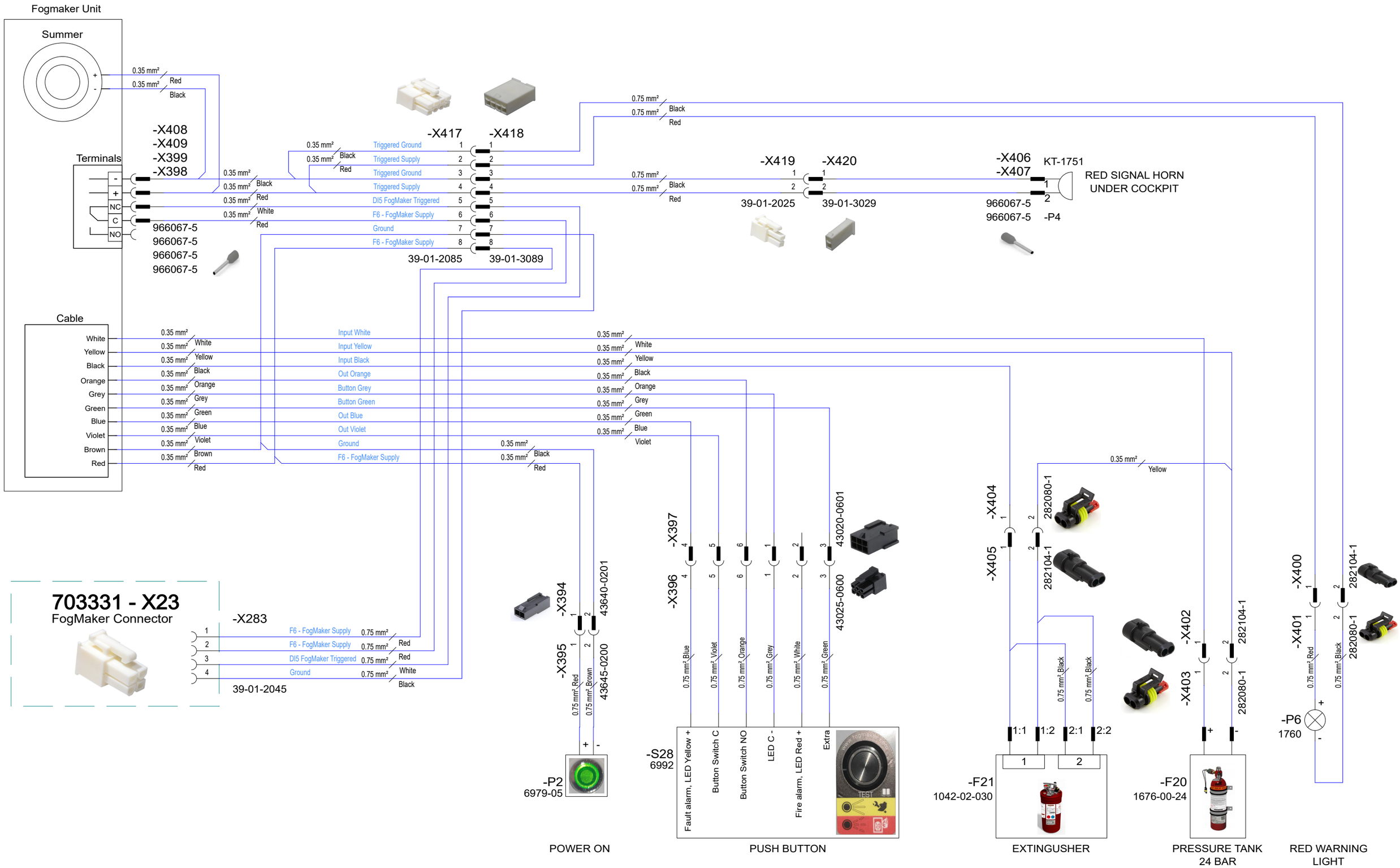

Rev	Note	Rev. date	Approved by
B		2025-09-10	

Terri 3 : Circuit Diagram

Drawing nr: 703074

Version	Current edition by	Current edition date
1	Carl	2025-09-10

TERRI FOR ALL TERRAIN

FogMaker

Terri
0476-709790
www.terri.se

Approved by	
Approved date	
Designed by	CV
Date	2022-11-23

Sheet	Next	# sheets	Edition
33	34	31	B

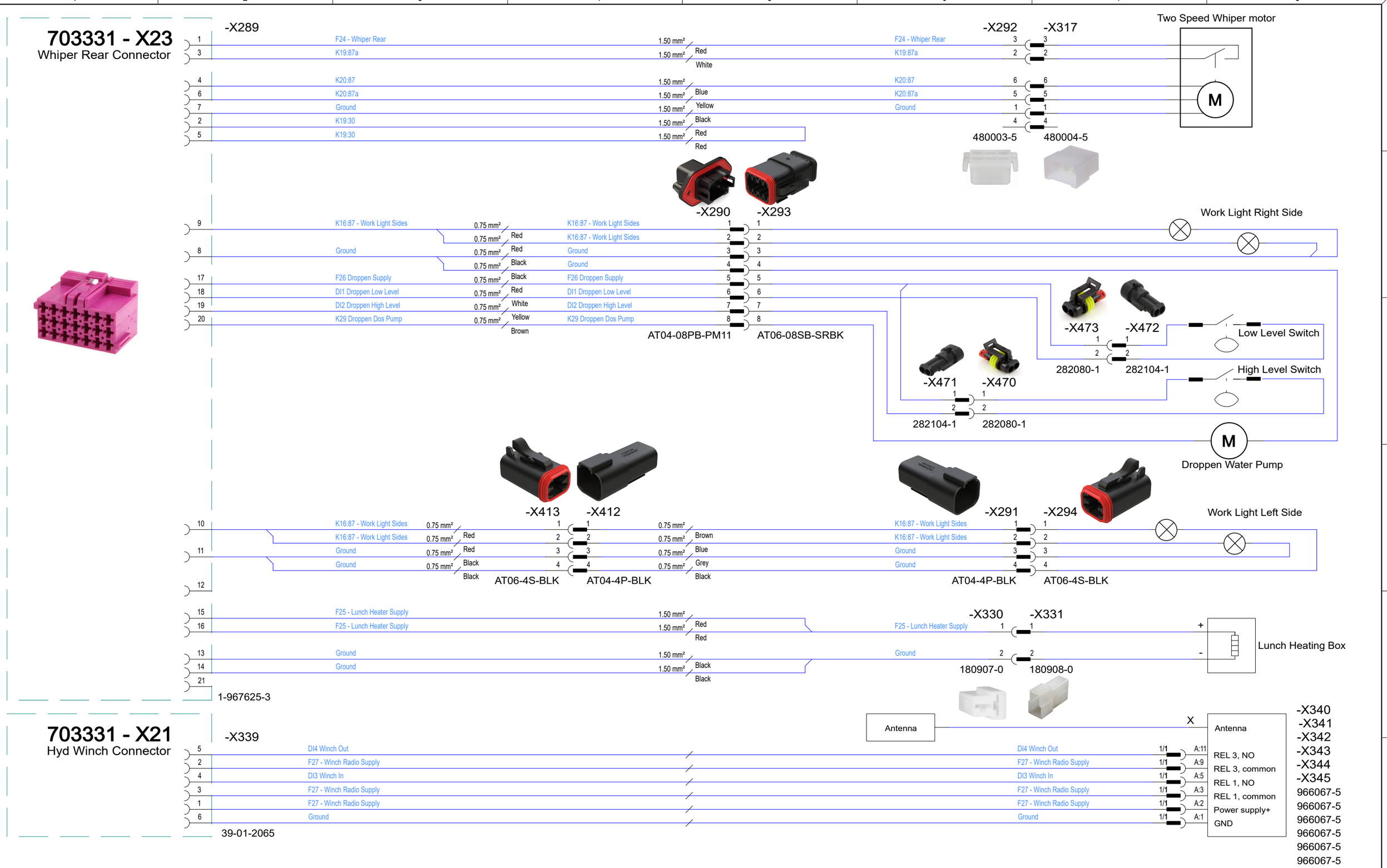

Rev	Note	Rev. date	Approved by
B		2025-09-10	

Terri 3 : Circuit Diagram

Drawing nr: 703074

Version	Current edition by	Current edition date
1	Carl	2025-09-10

TERRI FOR ALL TERRAIN

Rear Whiper & Lights

CIRCUIT DIAGRAM

Terri
0476-709790
www.terri.se

Approved by	
Approved date	
Designed by	CV
Date	2022-11-23

Sheet	Next	# sheets	Edition
34	35	31	B

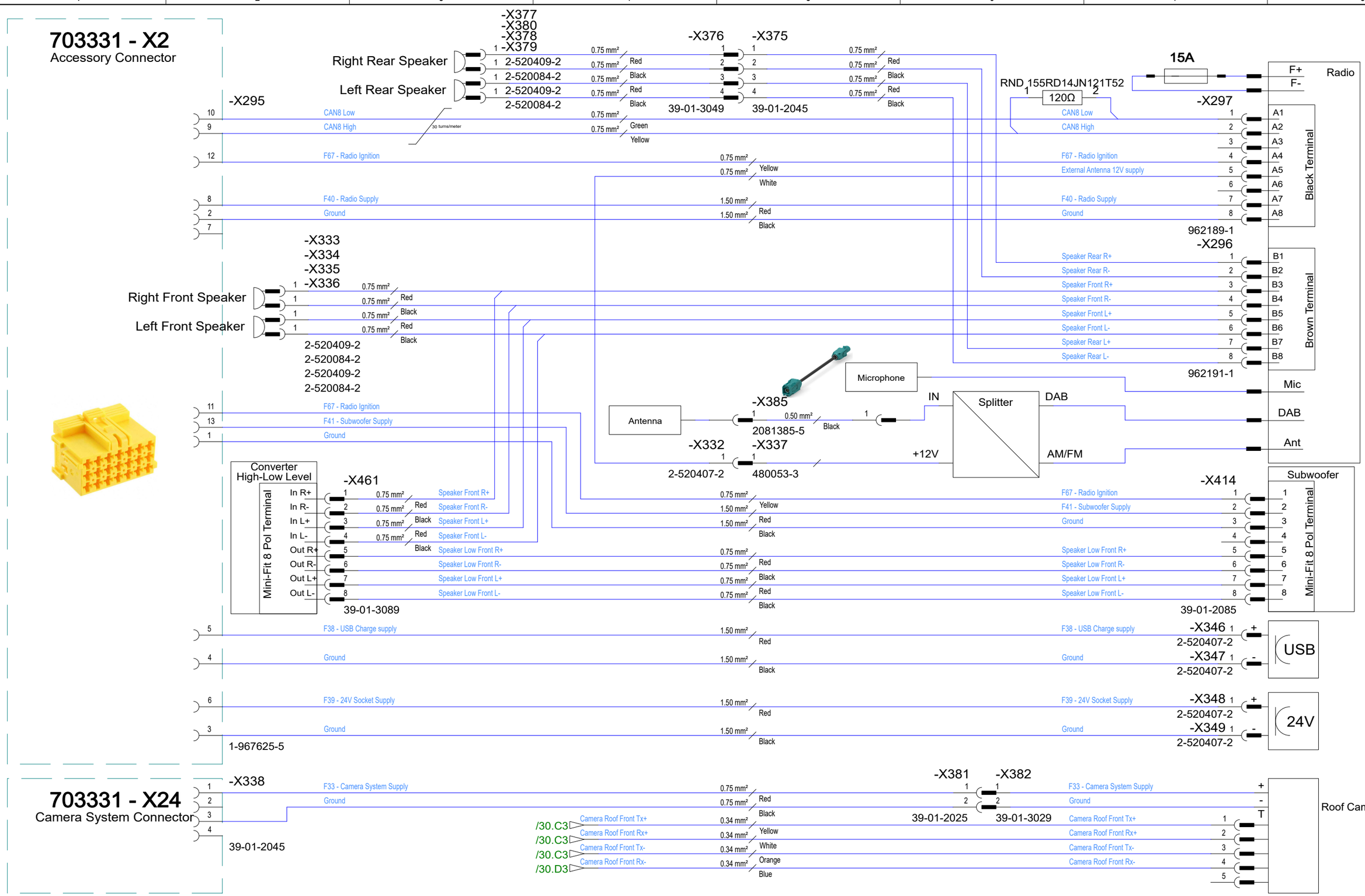

Rev	Note	Rev. date	Approved by
B		2025-09-10	

Terri 3 : Circuit Diagram

Drawing nr: 703074

Version	Current edition by	Current edition date
1	Carl	2025-09-10

TERRI FOR ALL TERRAIN

Radio & Extras

CIRCUIT DIAGRAM

Terri
0476-709790
www.terri.se

Approved by	
Approved date	
Designed by	CV
Date	2022-11-23

Sheet	Next	# sheets	Edition
35	-	31	B