TERRI

FOR ALL TERRAIN

QUALITY FORESTRY

MADE IN SMÅLAND

D	Valves	2022-09-06	GS	date	2023-01-30	Model: Terri 3 Wheels			
E	Radio/Eber	2022-01-27	CV	User	CV				
F	AngleSens	2023-01-30	CV	Proved	RH				
Status	change	date	name	Standard	InevTC	Origin F (702832)	Repl. f. E (702832)		

TERRI FOR ALL TERRAIN

TERRI
0476-70 97 90
www.terri.se

Drawing nr: 702832

=T3

Bäckgatan 32
34322 Älmhult

FRONT PAGE

Sheet 1
62 Sh.

contents

Sheet	Description	date	editor	Document type
1	FRONT PAGE	2022-09-06	GS	Electric
2	CONTENTS	2022-09-06	GS	Electric
3	CONTENTS	2022-09-06	GS	Electric
4	CONTENTS	2022-09-06	GS	Electric
5	Bill of Material	2022-09-06	GS	Electric
6	Bill of Material	2022-09-06	GS	Electric
7	Bill of Material	2022-09-06	GS	Electric
8	Bill of Material	2022-09-06	GS	Electric
9	Bill of Material	2022-09-06	GS	Electric
10	Bill of Material	2022-09-06	GS	Electric
11	Bill of Material	2022-09-06	GS	Electric
12	Bill of Material	2022-09-06	GS	Electric
13	Bill of Material	2022-09-06	GS	Electric
14	Bill of Material	2022-09-06	GS	Electric
15	Bill of Material	2022-09-06	GS	Electric
16	Bill of Material	2022-09-06	GS	Electric
17	OUTSIDE VIEW	2022-09-06	GS	Electric
18	OUTSIDE VIEW	2022-09-06	GS	Electric
19	FLOOR AND BANKER VIEW	2022-09-06	GS	Electric
20	PANEL BOARD VIEW	2022-09-06	GS	Electric
21	PANEL VIEW	2022-09-06	GS	Electric
22	FLOOR VIEW	2022-09-06	GS	Electric
100	MAIN CIRCUIT DIAGRAM	2022-09-06	GS	Electric
101	RELAY K1-K9	2022-09-06	GS	Electric
102	RELAY K10-K16	2022-09-06	GS	Electric
103	SWITCHES S1-S6	2022-09-06	GS	Electric
104	SWITCHES S7-S12	2022-09-06	GS	Electric
105	SWITCHES S13-S20	2022-09-06	GS	Electric

contents

Sheet	Description	date	editor	Document type
106	TERMINALS X1:1-12	2022-09-06	GS	Electric
107	TERMINALS X1:13-24	2022-09-06	GS	Electric
108	TERMINAL FUSES X1:31-43	2022-09-06	GS	Electric
109	TERMINAL FUSES X1:44-56	2022-09-06	GS	Electric
110	MIXED THINGS	2022-09-06	GS	Electric
111	RADIO, 12V SOCKET AND USB	2022-09-06	GS	Electric
112	LOGMAX K9, K10, K14	2022-09-06	GS	Electric
113	LOGMAX K11, K12, K13	2022-09-06	GS	Electric
114	FIRE SAFETY SYSTEM	2022-09-06	GS	Electric
115	WIPERS AND CAMERAS	2022-09-06	GS	Electric
116	CHAIR / CPC	2022-09-06	GS	Electric
117	MECANIL JOYSTICK	2022-09-06	GS	Electric
118	AC UNIT	2022-09-06	GS	Electric
119	EASYSTART	2022-09-06	GS	Electric
120	ECC	2022-09-06	GS	Electric
121	PEDALS	2022-09-06	GS	Electric
122	C5 AND C6 CONTACT	2022-09-06	GS	Electric
123	WORKLIGHT	2022-09-06	GS	Electric
124	A1 : VALVES	2022-09-06	GS	Electric
125	A2 : VALVES	2022-09-06	GS	Electric
126	A3 : FLUIDS	2022-09-06	GS	Electric
127	A4 : AC	2022-09-06	GS	Electric
128	A5 : LIGHT FORWARD AND DIV	2022-09-06	GS	Electric
129	A6 : TRAILER AND DIV BACK	2022-09-06	GS	Electric
130	A7 : DRIVE VALVE LF BOGGI	2022-09-06	GS	Electric
131	A8 : DRIVE VALVE RF BOGGI	2022-09-06	GS	Electric
132	A9 : DRIVE VALVE LB BOGGI	2022-09-06	GS	Electric
133	A10 : DRIVE VALVE RB BOGGI	2022-09-06	GS	Electric

contents

Sheet	Description	date	editor	Document type
134	A11 : EXTRA	2022-09-06	GS	Electric
135	A12 : CAT ENGINE	2022-09-06	GS	Electric
136	A13 : HYDRAULIC STEERING	2022-09-06	GS	Electric
137	DISPLAY AND COMPUTER	2022-09-06	GS	Electric
138	CAT ENGINE CABLE	2022-09-06	GS	Electric

bill of material

Higher Level Assignment: Location designation:

Pos.	No.	Article Number	Description	manufacturer	Device designation
1	1	24-7874	Connector 2-pole	Elfa	=T3+EXT-X84
2	1	1042-02-030	Extinguisher 4L HP/TV/Sig. mod.	Fogmaker	=T3+P4-F21
3	1	1676-00-24	Detector fluid bottle (24bar)	Fogmaker	=T3+P4-F20
4	1	1760	Red Warning light	Fogmaker	=T3+P4-P6
5	1	6810	Black Cable 4x0,75	Fogmaker	=T3+P4-W43
6	1	6811	Grey Cable 2x0,75	Fogmaker	=T3+P4-W8
7	1	6979-05	Green Diod	Fogmaker	=T3+P4-P2
8	1	6992	Switch 2-pole 0-I	Fogmaker	=T3+P2-S28
9	4	69841	Connector 2-pole	Fogmaker	=T3+P4-X5.1, =T3+P4-X5.2, =T3+P4-X5, =T3+P4-X7
10	2	401503-1	Grey Cable (2x0,5)(2+3x1,5)	Logmax	=T3+EXT-W5, =T3+EXT-W6
11	1	8003090	ECC LOKAB CONTROLER	Lokab	=T3+P4-K23
12	1	3336774002	Alarm kit 34D	Fogmaker	=T3+P4-P5
13	4	Caldaro Pedal Cable 1	Black Cable (4x0,75)	Caldaro	=T3+P6-W22, =T3+P6-W23, =T3+P6-W24, =T3+P6-W25
14	40	Chassi Earth	Earth-chassi		=T3+EXT-PE1, =T3+EXT-PE2, =T3+EXT-PE3, =T3+EXT-PE4, =T3+EXT-PE18, =T3+EXT-PE19, =T3+EXT-PE20, =T3+P4-PE5, =T3+P4-PE6, =T3+P4-PE7, =T3+P4-PE8, =T3+P4-PE9, =T3+P4-PE10, =T3+P4-PE11, =T3+P4-PE12, =T3+P4-PE13, =T3+P4-PE14, =T3+P4-PE15, =T3+P4-PE16, =T3+P4-PE17, =T3+P4-PE21, =T3+P4-PE22, =T3+P4-PE23, =T3+P4-PE24, =T3+P4-PE34, =T3+P4-PE35, =T3+P4-PE36, =T3+P4-PE37, =T3+P4-PE38, =T3+P4-PE39, =T3+P4-PE40, =T3+P6-PE25, =T3+P6-PE26, =T3+P6-PE27, =T3+P6-PE28, =T3+P6-PE29, =T3+P6-PE30, =T3+P6-PE31, =T3+P6-PE32, =T3+P6-PE33
15	1	DTM06-12S	Connector DTM Series; 12 positions; plug	Deutsch	=T3+EXT-X83.1
16	24	DTM-C-B-AWG20-24			=T3+EXT-X83.1(12), =T3+P2-X10(12)
17	9	DTM-C-S-AWG20-24			=T3+P4-X28.2(9)

bill of material

Higher Level Assignment: Location designation:

Pos.	No.	Article Number	Description	manufacturer	Device designation
18	1	Eberspächer-Cable 1	Black Cable (2x2,5)(6x0,5)	Eberspächer	=T3+P4-W12
19	1	Eberspächer-Cable 2	Black Cable (2x1.0)	Eberspächer	=T3+P4-W15
20	4	Eberspächer-Cable 4	Black Cable (4x0.5)	Eberspächer	=T3+EXT-W17, =T3+P4-W16, =T3+P4-W18, =T3+P4-W19
21	1	Eberspächer-Cable 5	Black Cable (9x0.5)	Eberspächer	=T3+P4-W14
22	2	Eberspächer-Cable 6	Black Cable (3x0.5)	Eberspächer	=T3+P4-W13, =T3+P4-W20
23	1	Eberspächer-Cable 7	Black Cable (3x0.5)	Eberspächer	=T3+P4-W21
24	1	KT-2JA001364001	Interior light		=T3+P4-P3
25	15	KT-79XXXX	Black Cable 7x0,75		=T3+EXT-W89, =T3+EXT-W90, =T3+EXT-W91, =T3+EXT-W92,
					=T3+EXT-W93, =T3+EXT-W94, =T3+EXT-W95, =T3+EXT-W96,
					=T3+EXT-W101, =T3+EXT-W102, =T3+EXT-W103, =T3+EXT-W104,
					=T3+EXT-W105, =T3+EXT-W106, =T3+EXT-W107
26	1	KT-1751	Fire alarm siren	Fogmaker	=T3+EXT-P4
27	1	KT-2352	Main switch 250A		=T3+EXT-MS1
28	1	KT-33570			=T3+EXT-X82
29	1	KT-082002	Trailer socket		=T3+EXT-X82
30	1	KT-098712	Buzzer		=T3+EXT-H5
31	8	KT-138501	Grey Cable 2x1,5		=T3+EXT-W34, =T3+EXT-W35, =T3+EXT-W36, =T3+EXT-W37,
					=T3+EXT-W38, =T3+EXT-W39, =T3+EXT-W40, =T3+EXT-W41
32	3	KT-139301	Grey Cable 4x1,5		=T3+EXT-W68, =T3+EXT-W69, =T3+EXT-W70
33	18	KT-175548	Connector 6-pole		=T3+P3-X18.1, =T3+P3-X30.2, =T3+P4-X25.2, =T3+P6-A7.2,
					=T3+P6-A8.2, =T3+P6-A11.2, =T3+P4-ARB.2, =T3+P4-X6.2,
					=T3+P4-X8.2, =T3+P4-X72.2, =T3+P6-A1.2, =T3+P6-A2.2,
					=T3+P6-A3.2, =T3+P6-A4.2, =T3+P6-A5.2, =T3+P6-A6.2,
					=T3+P6-A9.2, =T3+P6-A10.2
34	3	KT-175550	Connector 8-pole		=T3+P4-X6.1, =T3+P4-X8.1, =T3+P4-X72.1
35	6	KT-175552	Connector 6-pole		=T3+P3-X18.2, =T3+P3-X30.1, =T3+P4-X25.1, =T3+P6-A7.1,

bill of material

Higher Level Assignment: Location designation:

Pos.	No.	Article Number	Description	manufacturer	Device designation
					=T3+P6-A8.1, =T3+P6-A11.1
36	3	KT-175558	Connector 3-pole Female		=T3+P2-X54.1, =T3+P4-X20.1, =T3+P5-X15.1
37	3	KT-175559	Connector 3-pole Male		=T3+P2-X54.2, =T3+P4-X20.2, =T3+P5-X15.2
38	6	KT-175560	Connector 2-pole small Male		=T3+EXT-X81.2, =T3+P1-X51.1, =T3+P4-X4.2, =T3+P4-X44.2,
					=T3+P4-X68.2, =T3+P4-X71.2
39	6	KT-175561	Connector 4-pole Male		=T3+EXT-X21.2, =T3+P1-X31.2, =T3+P1-X49.1, =T3+P2-X56.2,
					=T3+P3-X17.1, =T3+P5-X32.2
40	4	KT-175562	Connector 2-pole small		=T3+EXT-X81.1, =T3+P1-X51.2, =T3+P4-X4.1, =T3+P4-X68.1
41	6	KT-175563	Connector 4-pole Female		=T3+EXT-X21.1, =T3+P1-X31.1, =T3+P1-X49.2, =T3+P2-X56.1,
					=T3+P3-X17.2, =T3+P5-X32.1
42	1	KT-239802	Flash light	ECCO Group	=T3+EXT-P22
43	1	KT-240000	Wiper Back		=T3+P3-M3
44	1	KT-240001	Wiper Front		=T3+P1-M4
45	15	KT-240014			=T3+P2-S1, =T3+P2-S2, =T3+P2-S3, =T3+P2-S4, =T3+P2-S5,
					=T3+P2-S7, =T3+P2-S8, =T3+P2-S9, =T3+P2-S11, =T3+P2-S12,
					=T3+P2-S15, =T3+P2-S16, =T3+P2-S17, =T3+P2-S18, =T3+P2-S20
46	1	KT-240025	Flashing relay		=T3+P4-K7
47	5	KT-240026	Switch Relay 5-pin		=T3+P4-K9, =T3+P4-K10, =T3+P4-K11, =T3+P4-K12, =T3+P4-K13
48	1	KT-240028	Switch Relay 5-pin		=T3+P4-K14
49	7	KT-240029	Relay with fuse 4-pin		=T3+P4-K1, =T3+P4-K2, =T3+P4-K3, =T3+P4-K4, =T3+P4-K5,
					=T3+P4-K15, =T3+P4-K16
50	2	KT-240031	Switch Relay 5-pin		=T3+P4-K6, =T3+P4-K8
51	1	KT-292490	EasyStart GSM	Eberspächer	=T3+P4-K24
52	1	KT-765029	DRC12-70P	Zeppelin Sverige AB	=T3+P1-X69
53	1	KT-765030	HDP24-24-19PE	Zeppelin Sverige AB	=T3+P1-X70
54	1	KT-785070	Connector 12-pole		=T3+P3-LX10

bill of material

Higher Level Assignment: Location designation:

Pos.	No.	Article Number	Description	manufacturer	Device designation
55	2	KT-785071	Connector 12-pole		=T3+EXT-X59, =T3+P3-LX11
56	10	KT-785177	Connector 8-pole 8x0,25 open ended M8		=T3+P3-LX14, =T3+P4-ARB.1, =T3+P6-A1.1, =T3+P6-A2.1, =T3+P6-A3.1, =T3+P6-A4.1, =T3+P6-A5.1, =T3+P6-A6.1, =T3+P6-A9.1, =T3+P6-A10.1
57	1	KT-785178	Connector 12-pole		=T3+P3-LX9
58	1	KT-785179	Log Mate 510 Display	Log Max	=T3+P3-P1
59	1	KT-785200			=T3+P3-W3
60	1	KT-790553	Hydraulic oil filter pressure indicator,		=T3+EXT-B12
61	1	KT-790595	Potentiometer	RS-Component	=T3+P2-R14
62	12	KT-790629-3	Valve Magnet 08 12v		=T3+EXT-Q1, =T3+EXT-Q2, =T3+EXT-Q3, =T3+EXT-Q4, =T3+EXT-Q5, =T3+EXT-Q6, =T3+EXT-Q7, =T3+EXT-Q8, =T3+EXT-Q9, =T3+EXT-Q10, =T3+EXT-Q11, =T3+EXT-Q12
63	1	KT-790668	Connector 8-pin Female x2 Brown/Black IS		=T3+P1-X45
64	1	KT-790785			=T3+P2-S11
65	1	KT-790832	AC filter sensor		=T3+EXT-B14
66	2	KT-790852	AC fan condenser		=T3+EXT-M10.1, =T3+EXT-M10.2
67	1	KT-790862			=T3+P2-S18
68	1	KT-790863	Ignition switch		=T3+P2-S27
69	1	KT-790864			=T3+P2-S27
70	1	KT-790880	Emergency stop 2-pol	KGK	=T3+P2-S26
71	1	KT-790915-3	Pump control		=T3+EXT-M11
72	5	KT-790920	Pressure transmitter		=T3+EXT-B15, =T3+EXT-B16, =T3+EXT-B17, =T3+EXT-B18, =T3+EXT-B19
73	1	KT-790936	Washer fluid pump		=T3+EXT-M12
74	1	KT-790948	2XUSB ports		=T3+P2-X46
75	1	KT-790949	9-pole Connector Male		=T3+EXT-X58.2

bill of material

Higher Level Assignment: Location designation:

Pos.	No.	Article Number	Description	manufacturer	Device designation
76	1	KT-790976	Hydraulic oil sensor		=T3+EXT-B11
77	1	KT-791003	Warming food box		=T3+P4-E2
78	1	KT-791012-2	Connector 12-pole to MC018	Danfoss	=T3+EXT-X83.2
79	1	KT-791014	9-pole Connector Female		=T3+EXT-X58.1
80	2	KT-791043			=T3+P2-S17, =T3+P2-S20
81	4	KT-791045-1	Worklight, LED 60 420 Hanging	Nordiclights	=T3+EXT-P15, =T3+EXT-P16, =T3+EXT-P17, =T3+EXT-P18
82	1	KT-791057	EasyStart Web		=T3+P4-K25
83	2	KT-791059-2			=T3+P3-W1, =T3+P3-W2
84	1	KT-791060	Switch 2-pole x2 0-I	KGK	=T3+P2-S18
85	4	KT-791062	Pedal big black	Caldaro	=T3+P6-R10, =T3+P6-R11, =T3+P6-R12, =T3+P6-R13
86	1	KT-791097	Calearo Heavy duty radio	Calearo	=T3+P1-P8
87	1	KT-791099	Verteller/Splitter	Calearo	=T3+P1-X48
88	2	KT-791103	Parking lamp Led		=T3+EXT-P27, =T3+EXT-P28
89	1	KT-791105	Fuel level sensor		=T3+EXT-B13
90	1	KT-791109	Antenna 34D	Calearo	=T3+EXT-X50
91	4	KT-791117	Worklight, LED 110F		=T3+EXT-P30, =T3+EXT-P33, =T3+EXT-P39, =T3+EXT-P40
92	2	KT-791118	Front lamp side of grill		=T3+EXT-P25, =T3+EXT-P26
93	2	KT-791146	Worklight, LED Pictor 620	Nordiclights	=T3+EXT-P23, =T3+EXT-P24
94	2	KT-791173	Battery 100Ah		=T3+EXT-G1, =T3+EXT-G2
95	2	KT-791194	Calearo Heavy duty Speaker		=T3+P1-H1, =T3+P1-H2
96	1	KT-791203-1			=T3+P2-K18
97	2	KT-791203-2	Connector DTM Series; 12 positions; plug	Deutsch	=T3+P2-K18, =T3+P2-X10
98	1	KT-791204	XL104-0000	Danfoss	=T3+P4-K19
99	2	KT-791204-1	Connector DTM Series; 50 positions; rece	Deutsch	=T3+P4-K19, =T3+P4-X11
100	2	KT-791204-2	Connector DTM Series; 50 positions; rece	Deutsch	=T3+P4-K19, =T3+P4-X12
101	8	KT-791206	Connector DT Series 6p	Abkati	=T3+EXT-X132, =T3+EXT-X133, =T3+EXT-X134, =T3+EXT-X135,

bill of material

Higher Level Assignment: Location designation:

Pos.	No.	Article Number	Description	manufacturer	Device designation
					=T3+EXT-X136, =T3+EXT-X137, =T3+EXT-X138, =T3+EXT-X139
102	1	KT-791211			=T3+P2-K18
103	1	KT-791212			=T3+P4-K19
104	1	KT-791234	24V/12V Converter	KGK	=T3+P4-U1
105	2	KT-791237	Worklight, LED HBA 30W	HBA	=T3+EXT-P37, =T3+EXT-P38
106	1	KT-791254	Radio control Antenna	Scanreco	=T3+P4-X55
107	1	KT-791255	Radio control Hyd.winch	Scanreco	=T3+P4-K27
108	1	KT-791264	12V Socket		=T3+P2-X47
109	1	KT-791272			=T3+P2-S1
110	4	KT-791358	Valve to hydraulic PVEH32-S7-H Active 1x	Danfoss	=T3+EXT-Q22, =T3+EXT-Q23, =T3+EXT-Q24, =T3+EXT-Q25
111	6	KT-791359	Connector DT Series 4p	Abkati	=T3+EXT-X140, =T3+EXT-X141, =T3+EXT-X142, =T3+EXT-X143, =T3+P2-X13, =T3+P6-X74
112	15	KT-890047			=T3+P2-S1, =T3+P2-S2, =T3+P2-S3, =T3+P2-S4, =T3+P2-S5, =T3+P2-S7, =T3+P2-S8, =T3+P2-S9, =T3+P2-S11, =T3+P2-S12, =T3+P2-S15, =T3+P2-S16, =T3+P2-S17, =T3+P2-S18, =T3+P2-S20
113	15	KT-890048			=T3+P2-S1, =T3+P2-S2, =T3+P2-S3, =T3+P2-S4, =T3+P2-S5, =T3+P2-S7, =T3+P2-S8, =T3+P2-S9, =T3+P2-S11, =T3+P2-S12, =T3+P2-S15, =T3+P2-S16, =T3+P2-S17, =T3+P2-S18, =T3+P2-S20
114	1	KT-890049	Switch 2-pole switching 0-I	KGK	=T3+P2-S12
115	16	KT-890051			=T3+P4-K1, =T3+P4-K2, =T3+P4-K3, =T3+P4-K4, =T3+P4-K5, =T3+P4-K6, =T3+P4-K7, =T3+P4-K8, =T3+P4-K9, =T3+P4-K10, =T3+P4-K11, =T3+P4-K12, =T3+P4-K13, =T3+P4-K14, =T3+P4-K15, =T3+P4-K16
116	26	KT-1012751	Feed Through Terminal Block, UK Series ,	RS-Component	=T3+P4-X1(26)
117	15	KT-1427503	Black Cable 2x0,75		=T3+EXT-W43, =T3+EXT-W44, =T3+EXT-W45, =T3+EXT-W47, =T3+EXT-W48, =T3+EXT-W50, =T3+EXT-W74, =T3+EXT-W75,

bill of material

Higher Level Assignment: Location designation:

Pos.	No.	Article Number	Description	manufacturer	Device designation
					=T3+EXT-W77, =T3+EXT-W78, =T3+EXT-W81, =T3+P3-W33, =T3+P4-W7, =T3+P4-W46, =T3+P4-W49
118	1	KT-2138278	Connection	Deutch	=T3+P2-X53
119	11	KT-2719190	Connector DT Series 4p	Abkati	=T3+EXT-X75, =T3+EXT-X76, =T3+EXT-X77, =T3+EXT-X79, =T3+EXT-X80, =T3+P4-X63.1, =T3+P4-X64.1, =T3+P4-X65.1, =T3+P4-X66.1, =T3+P4-X67.1, =T3+P5-X35.1
120	4	KT-2719191	Connector DT Series 4p	Abkati	=T3+P4-X63.2, =T3+P4-X64.2, =T3+P4-X65.2, =T3+P4-X66.2
121	3	KT-2719194	Connector DT Series 2p	Abkati	=T3+EXT-X78, =T3+EXT-X86, =T3+EXT-X87
122	1	KT-2719196	Connector DT Series 6p	Abkati	=T3+P6-X73.1
123	1	KT-2719198	Connector DT Series 6p	Abkati	=T3+P6-X73.2
124	1	KT-3791203	DM430E-0-1-1-0	Danfoss	=T3+P2-K18
125	1	KT-4690135	Red Warning light	Abkati	=T3+P4-P7
126	1	KT-7186873	Connector 3-pole	Elfa	=T3+EXT-X85
127	1	KT-8002180	Connector CPC 16pol Male	Elfa	=T3+P4-X14.1
128	1	KT-11052622	Rectifier diode	Elfa	=T3+P4-R1
129	1	KT-13766289	Beep sensor	Abkati	=T3+P4-H3
130	2	KT-14347282	Connector 16-pole small		=T3+P6-A13.2, =T3+P6-A13.1
131	2	KT-14347340	Connector 16-pole big		=T3+EXT-A12.2, =T3+EXT-A12.1
132	1	KT-14450144	Connector CPC 16pol Female	Elfa	=T3+P4-X14.2
133	39	KT-30012572	Feed Through Terminal Block, UK Series ,	RS-Component	=T3+P4-X1(39)
134	6	KT-30049332	Network cable 3x0,5mm2 Unshielded	Lapp	=T3+EXT-W52, =T3+EXT-W53, =T3+P4-W28, =T3+P4-W29, =T3+P4-W30, =T3+P4-W31
135	1	KT-30049333	Network cable 4x0,5mm2 Unshielded	Lapp	=T3+P4-W32
136	2	KT-30049334	Network cable 5x0,5mm2 Unshielded	Lapp	=T3+EXT-W54, =T3+EXT-W55
137	10	KT-30049339	Network cable 7x0,5mm2 Unshielded	Lapp	=T3+EXT-W51, =T3+EXT-W73, =T3+EXT-W80, =T3+EXT-W83, =T3+EXT-W84, =T3+EXT-W85, =T3+EXT-W86, =T3+EXT-W87,

bill of material

Higher Level Assignment: Location designation:

Pos.	No.	Article Number	Description	manufacturer	Device designation
					=T3+EXT-W88, =T3+P4-W42
138	2	KT-30058503			=T3+P4-X1(2)
139	1	KT-30058608			=T3+P4-X1
140	4	KT-30088512	Resistance 1k Ohm	Elfa	=T3+P4-R5, =T3+P4-R9, =T3+P1-R15, =T3+P4-R4
141	2	KT-30093134	Grey Cable 4x0,5		=T3+P5-W10, =T3+P5-W11
142	1	KT-45074550	Spinning orange warning light		=T3+EXT-P21
143	1	KT-53249050	Tank socket		=T3+EXT-X60
144	2	KT-5201152003			=T3+EXT-F1, =T3+EXT-F2
145	5	KT-5201299040	Flat fuse 40A		=T3+EXT-F1, =T3+EXT-F2, =T3+P4-F5, =T3+P4-F7, =T3+P4-F10
146	3	KT-5201299060	Flat fuse 60A		=T3+P1-F22, =T3+P4-F3, =T3+P4-F4
147	2	KT-5201498030	Flat fuse 30A		=T3+P4-F6, =T3+P4-F8
148	8	KT-5201498900			=T3+P4-F3, =T3+P4-F4, =T3+P4-F5, =T3+P4-F6, =T3+P4-F7,
					=T3+P4-F8, =T3+P4-F9, =T3+P4-F10
149	1	KT-T50127			=T3+P2-S7
150	1	KT-T50128			=T3+P2-S8
151	1	KT-T50550			=T3+P2-S9
152	1	KT-TBSK4WD	S Connector S175	Abkati	=T3+EXT-X61
153	1	Smal Pedal Cable 1	Black Cable (2x0,75)		=T3+P6-W26
154	1	Smal Pedal Cable 2	Black Cable (4x0,75)		=T3+P6-W27
155	1	T50032			=T3+P2-S12
156	1	T50033			=T3+P2-S16
157	1	T50125	Switch 2-pole 0-I	KGK	=T3+P2-S7
158	2	T50153	Switch 3-pole I-0-II	KGK	=T3+P2-S8, =T3+P2-S17
159	1	T50266	Grey Cable 3x1,5		=T3+P5-W9
160	1	T50330	Switch 3-pole 0-I-II	KGK	=T3+P2-S16
161	2	T50462	Indicator arm, pair	Olssons Parts	=T3+EXT-P19, =T3+EXT-P20

bill of material

Higher Level Assignment: Location designation:

Pos.	No.	Article Number	Description	manufacturer	Device designation
162	1	T50545	Switch 3-pole x2 0-I-II	KGK	=T3+P2-S2
163	2	T50549	Pedal small grey		=T3+P6-S31, =T3+P6-S32
164	1	T50566	Black Cable 5x0,75		=T3+EXT-W76
165	4	T50578	Resistance 120 Ohm	Elfa	=T3+EXT-R7, =T3+EXT-R8, =T3+P4-R2, =T3+P4-R3
166	8	T4299185-1	Switch 2-pole 0-I	KGK	=T3+P2-S1, =T3+P2-S3, =T3+P2-S4, =T3+P2-S5, =T3+P2-S9, =T3+P2-S11, =T3+P2-S15, =T3+P2-S20
167	1	T4299190			=T3+P2-S2
168	4	T4299191			=T3+P2-S3, =T3+P2-S4, =T3+P2-S5, =T3+P2-S15
169	1	TE-702606			=T3+P4-F9
170	2	TE-720143	Light package on trailer "Skövde"		=T3+EXT-P29, =T3+EXT-P32
171	2	TE-720174	Flashlight on trailer		=T3+EXT-P31, =T3+EXT-P34
172	1	TE-791059	Inductive sensor	OEM Automatic	=T3+P3-B1
173	1	TM-910177	Grey Cable 7x1,5		=T3+EXT-W79
174	12	Valve Cable 2x0.75	Black cable 2x0.75 ink.Valve kit		=T3+EXT-W56, =T3+EXT-W57, =T3+EXT-W58, =T3+EXT-W59, =T3+EXT-W60, =T3+EXT-W61, =T3+EXT-W62, =T3+EXT-W63, =T3+EXT-W64, =T3+EXT-W65, =T3+EXT-W66, =T3+EXT-W67
175	7	Valve Cable 4x0.75	Black cable 4x0.75 ink.Valve kit		=T3+EXT-W97, =T3+EXT-W98, =T3+EXT-W99, =T3+EXT-W100, =T3+EXT-W108, =T3+EXT-W109, =T3+EXT-W110
176	0	FLR4Y-B-0.5.GN/RD	PA automobile cable, conductor:Cu-ETP1,	LEONI	
177	0	FLR4Y-B-0.5-BK	PA automobile cable, conductor:Cu-ETP1,	LEONI	
178	0	FLR4Y-B-0.5-BN	PA automobile cable, conductor:Cu-ETP1,	LEONI	
179	0	FLR4Y-B-0.5-BU	PA automobile cable, conductor:Cu-ETP1,	LEONI	
180	0	FLR4Y-B-0.5-BU/BK	PA automobile cable, conductor:Cu-ETP1,	LEONI	
181	0	FLR4Y-B-0.5-BU/RD	PA automobile cable, conductor:Cu-ETP1,	LEONI	
182	0	FLR4Y-B-0.5-BU/WH	PA automobile cable, conductor:Cu-ETP1,	LEONI	
183	0	FLR4Y-B-0.5-BU/YE	PA automobile cable, conductor:Cu-ETP1,	LEONI	

bill of material

Higher Level Assignment: Location designation:

Pos.	No.	Article Number	Description	manufacturer	Device designation
184	0	FLR4Y-B-0.5-GN	PA automobile cable, conductor:Cu-ETP1,	LEONI	
185	0	FLR4Y-B-0.5-GN/BK	PA automobile cable, conductor:Cu-ETP1,	LEONI	
186	0	FLR4Y-B-0.5-PK/BK	PA automobile cable, conductor:Cu-ETP1,	LEONI	
187	0	FLR4Y-B-0.5-PK/WH	PA automobile cable, conductor:Cu-ETP1,	LEONI	
188	0	FLR4Y-B-0.5-RD	PA automobile cable, conductor:Cu-ETP1,	LEONI	
189	0	FLR4Y-B-0.5-RD/BK	PA automobile cable, conductor:Cu-ETP1,	LEONI	
190	0	FLR4Y-B-0.5-WH	PA automobile cable, conductor:Cu-ETP1,	LEONI	
191	0	FLR4Y-B-0.5-YE	PA automobile cable, conductor:Cu-ETP1,	LEONI	
192	0	FLR4Y-B-0.5-YE/RD	PA automobile cable, conductor:Cu-ETP1,	LEONI	
193	0	FLR4Y-B-0.25-GN	PA automobile cable, conductor:Cu-ETP1,	LEONI	
194	0	FLR4Y-B-0.25-GY	PA automobile cable, conductor:Cu-ETP1,	LEONI	
195	0	FLR4Y-B-0.25-OR	PA automobile cable, conductor:Cu-ETP1,	LEONI	
196	0	FLR4Y-B-0.25-RD	PA automobile cable, conductor:Cu-ETP1,	LEONI	
197	0	FLR4Y-B-0.25-WH	PA automobile cable, conductor:Cu-ETP1,	LEONI	
198	0	FLR4Y-B-0.25-YE	PA automobile cable, conductor:Cu-ETP1,	LEONI	
199	0	FLR4Y-B-0.75-BK	PA automobile cable, conductor:Cu-ETP1,	LEONI	
200	0	FLR4Y-B-0.75-BN	PA automobile cable, conductor:Cu-ETP1,	LEONI	
201	0	FLR4Y-B-0.75-BU	PA automobile cable, conductor:Cu-ETP1,	LEONI	
202	0	FLR4Y-B-0.75-GN	PA automobile cable, conductor:Cu-ETP1,	LEONI	
203	0	FLR4Y-B-0.75-GY	PA automobile cable, conductor:Cu-ETP1,	LEONI	
204	0	FLR4Y-B-0.75-OR	PA automobile cable, conductor:Cu-ETP1,	LEONI	
205	0	FLR4Y-B-0.75-RD	PA automobile cable, conductor:Cu-ETP1,	LEONI	
206	0	FLR4Y-B-0.75-VI	PA automobile cable, conductor:Cu-ETP1,	LEONI	
207	0	FLR4Y-B-0.75-WH	PA automobile cable, conductor:Cu-ETP1,	LEONI	
208	0	FLR4Y-B-0.75-YE	PA automobile cable, conductor:Cu-ETP1,	LEONI	
209	0	FLR4Y-B-1.5-BK	PA automobile cable, conductor:Cu-ETP1,	LEONI	

bill of material

Higher Level Assignment: Location designation:

Pos.	No.	Article Number	Description	manufacturer	Device designation
210	0	FLR4Y-B-1.5-BN	PA automobile cable, conductor:Cu-ETP1,	LEONI	
211	0	FLR4Y-B-1.5-BU	PA automobile cable, conductor:Cu-ETP1,	LEONI	
212	0	FLR4Y-B-1.5-BU/BK	PA automobile cable, conductor:Cu-ETP1,	LEONI	
213	0	FLR4Y-B-1.5-BU/WH	PA automobile cable, conductor:Cu-ETP1,	LEONI	
214	0	FLR4Y-B-1.5-GN	PA automobile cable, conductor:Cu-ETP1,	LEONI	
215	0	FLR4Y-B-1.5-GN/BK	PA automobile cable, conductor:Cu-ETP1,	LEONI	
216	0	FLR4Y-B-1.5-GY	PA automobile cable, conductor:Cu-ETP1,	LEONI	
217	0	FLR4Y-B-1.5-GY/BK	PA automobile cable, conductor:Cu-ETP1,	LEONI	
218	0	FLR4Y-B-1.5-OR	PA automobile cable, conductor:Cu-ETP1,	LEONI	
219	0	FLR4Y-B-1.5-RD	PA automobile cable, conductor:Cu-ETP1,	LEONI	
220	0	FLR4Y-B-1.5-VI	PA automobile cable, conductor:Cu-ETP1,	LEONI	
221	0	FLR4Y-B-1.5-VI/BK	PA automobile cable, conductor:Cu-ETP1,	LEONI	
222	0	FLR4Y-B-1.5-WH	PA automobile cable, conductor:Cu-ETP1,	LEONI	
223	0	FLR4Y-B-1.5-WH/BK	PA automobile cable, conductor:Cu-ETP1,	LEONI	
224	0	FLR4Y-B-1.5-YE	PA automobile cable, conductor:Cu-ETP1,	LEONI	
225	0	FLR4Y-B-2.5-BK	PA automobile cable, conductor:Cu-ETP1,	LEONI	
226	0	FLR4Y-B-2.5-BU	PA automobile cable, conductor:Cu-ETP1,	LEONI	
227	0	FLR4Y-B-2.5-GY	PA automobile cable, conductor:Cu-ETP1,	LEONI	
228	0	FLR4Y-B-2.5-RD	PA automobile cable, conductor:Cu-ETP1,	LEONI	
229	0	FLR4Y-B-2.5-WH	PA automobile cable, conductor:Cu-ETP1,	LEONI	
230	0	FLR4Y-B-4.0-RD	PA automobile cable, conductor:Cu-ETP1,	LEONI	
231	0	FLR4Y-B-6.0-BK	PA automobile cable, conductor:Cu-ETP1,	LEONI	
232	0	FLR4Y-B-6.0-RD	PA automobile cable, conductor:Cu-ETP1,	LEONI	
233	0	FLR4Y-B-16.0-BK	PA automobile cable, conductor:Cu-ETP1,	LEONI	
234	0	FLR4Y-B-25.0-BK	PA automobile cable, conductor:Cu-ETP1,	LEONI	
235	0	FLR4Y-B-25.0-OR	PA automobile cable, conductor:Cu-ETP1,	LEONI	

bill of material

Higher Level Assignment: Location designation:

Pos.	No.	Article Number	Description	manufacturer	Device designation
236	0	FLR4Y-B-50.0-BK	PA automobile cable, conductor:Cu-ETP1,	LEONI	
237	0	FLR4Y-B-50.0-RD	PA automobile cable, conductor:Cu-ETP1,	LEONI	

D	Valves	2022-09-06	GS	date	2023-01-30	Model: Terri 3 Wheels		TERRI 0476-70 97 90 www.terri.se	Drawing nr: 702832
E	Radio/Eber	2022-01-27	CV	User	CV				=T3
F	AngleSens	2023-01-30	CV	Proved	RH				Bäckgatan 32 34322 Älmhult
Status	change	date	name	Standard	InevTC	Origin F (702832)	Repl. f. E (702832)		Bill of Material

Sheet 16
62 Sh.

EXT

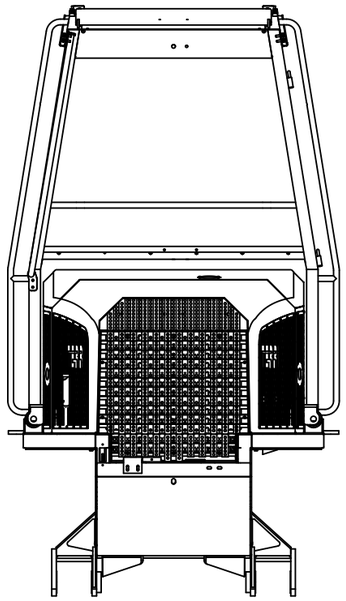

FRONT CABIN

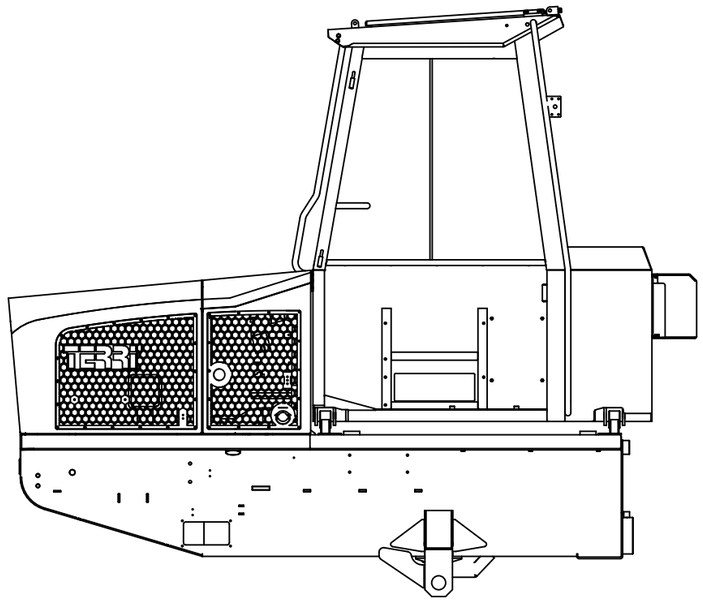

LEFT CABIN

D	Valves	2022-09-06	GS	date	2023-01-30	Model: Terri 3 Wheels		TERRI FOR ALL TERRAIN	TERRI 0476-70 97 90 www.terri.se	Drawing nr: 702832		=T3	
E	Radio/Eber	2022-01-27	CV	User	CV							+EXT	
F	AngleSens	2023-01-30	CV	Proved	RH					Bäckgatan 32 34322 Älmhult	OUTSIDE VIEW	Sheet 17	
Status	change	date	name	Standard	InevTC	Origin F (702832)	Repl. f. E (702832)					62 Sh.	

EXT

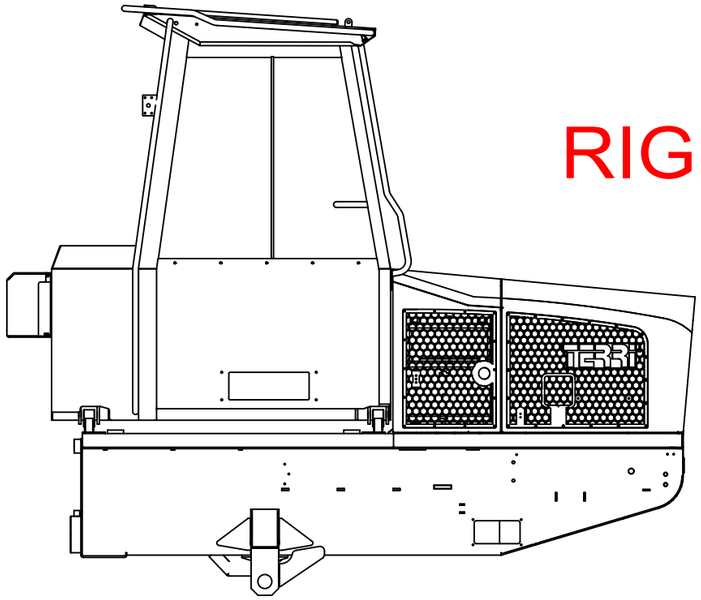

RIGHT CABIN

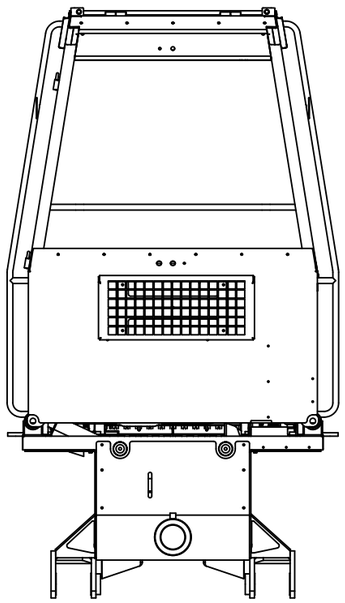

BACK CABIN

D	Valves	2022-09-06	GS	date	2023-01-30	Model: Terri 3 Wheels		TERRI FOR ALL TERRAIN	TERRI 0476-70 97 90 www.terri.se	Drawing nr: 702832		=T3	
E	Radio/Eber	2022-01-27	CV	User	CV							+EXT	
F	AngleSens	2023-01-30	CV	Proved	RH					Bäckgatan 32 34322 Älmhult	OUTSIDE VIEW	Sheet 18	
Status	change	date	name	Standard	InevTC	Origin F (702832)	Repl. f. E (702832)					62 Sh.	

EXT

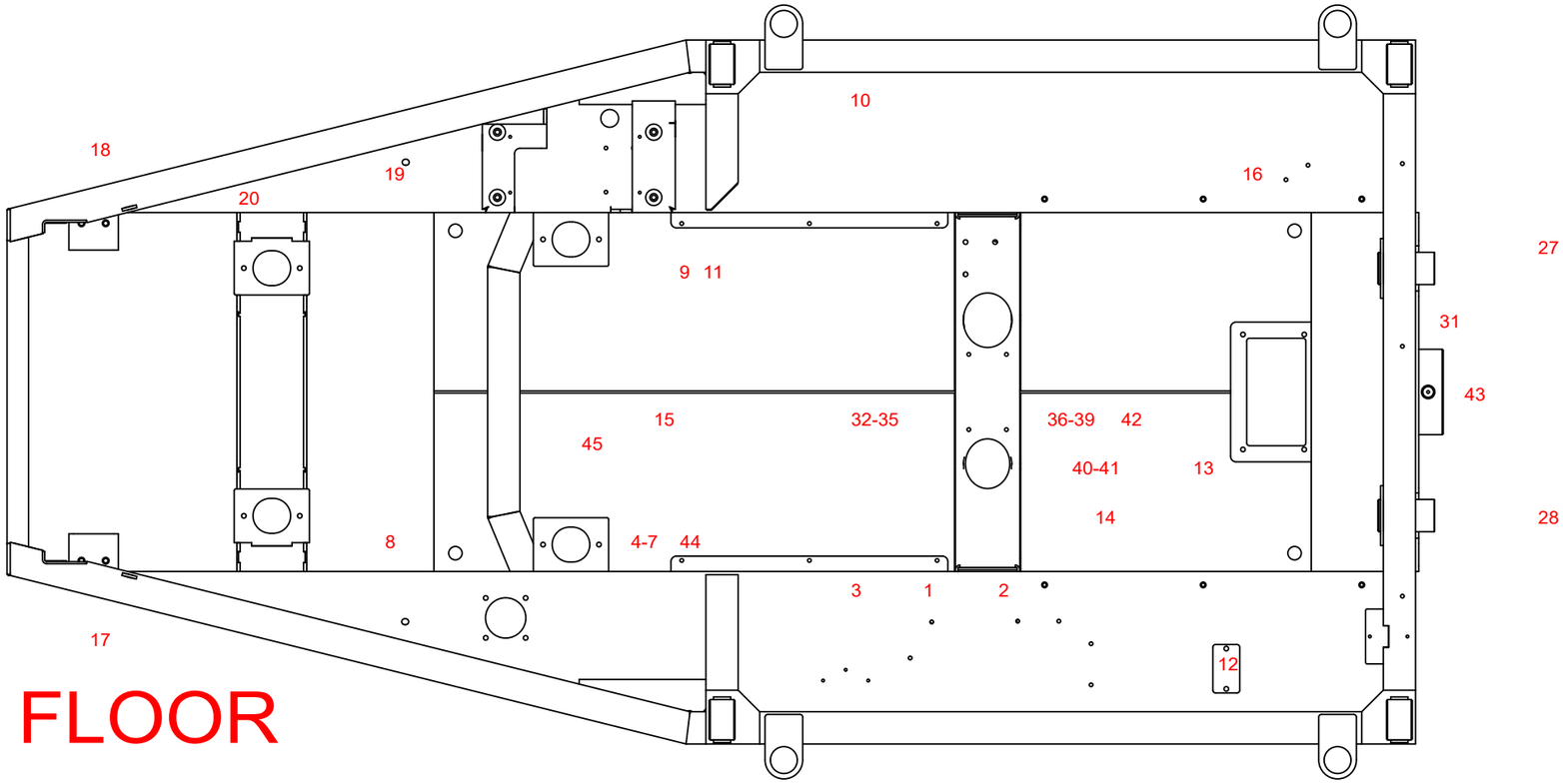

FLOOR

+EXT

1	Q1	s.124 Frame lock [ML]
2	Q2	s.124 Half displacement [V]
3	Q3	s.124 Free Wheel [FW]
4	Q4	s.124 Brake Front [B2]
5	Q5	s.124 Brake Rear [B1]
6	Q6	s.124 Refill wheel motor X [X]
7	Q7	s.125 Ladder up/down [ST]
8	Q8	s.125 Fuel valve diesel [DI]
9	Q9	s.125 Bypass oil cooling [BP]
10	Q10	s.125 Extra oil cooling [Optional]
11	Q11	s.125 Thermostat cooling hydraulic oil [TK]
12	Q12	s.125 Stub treatment pluss [UR]
13	B11	s.126 Hydraulic oil level sensor and temperature sensor
14	B12	s.126 Hydraulic oil filter sensor
15	B13	s.126 Fuel level sensor
16	B14	s.127 AC filter sensor
17	P25	s.128 Left front light [Optional]
18	P26	s.128 Right front light [Optional]
19	M12	s.128 Washer fluid pump
20	H5	s.128 Horn
21	P29	s.129 Left Banker Position, Brake, Left Flasher light [Optional]
22	P30	s.129 Worklight Banker [Optional]
23	P31	s.129 Flash light [Optional]
24	P32	s.129 Right Banker Position, Brake, Right Flasher light [Optional]
25	P33	s.129 Work light Banker [Optional]
26	P34	s.129 Flash light [Optional]
27	P37	s.129 Worklight Crane foot [Optional]
28	P38	s.129 Worklight Crane foot [Optional]
29	P39	s.129 Worklight behind Banker [Optional]
30	P40	s.129 Worklight behind Banker [Optional]
31	X82	s.129 Trailer socket [Optional]
32	Q14	s.130 Drive valve front wagon (LF boggi front) (F1)
33	Q15	s.130 Drive valve front wagon (LF boggi back) (F2)
34	Q16	s.131 Drive valve front wagon (RF boggi front) (F3)
35	Q17	s.131 Drive valve front wagon (RF boggi back) (F4)
36	Q18	s.132 Drive valve back wagon (LB boggi front) (B5)
37	Q19	s.132 Drive valve back wagon (LB boggi back) (B6)
38	Q20	s.133 Drive valve back wagon (RB boggi front) (B7)
39	Q21	s.133 Drive valve back wagon (RB boggi back) (B8)
40	B15	s.137 Pressure transmitter Pump pressure
41	B16	s.137 Pressure transmitter LS drive forward
42	B17	s.137 Pressure transmitter LS drive backward
43	B18	s.137 Pressure transmitter LS crane
44	B19	s.137 Pressure transmitter Servo pressure
45	M11	s.137 Pump

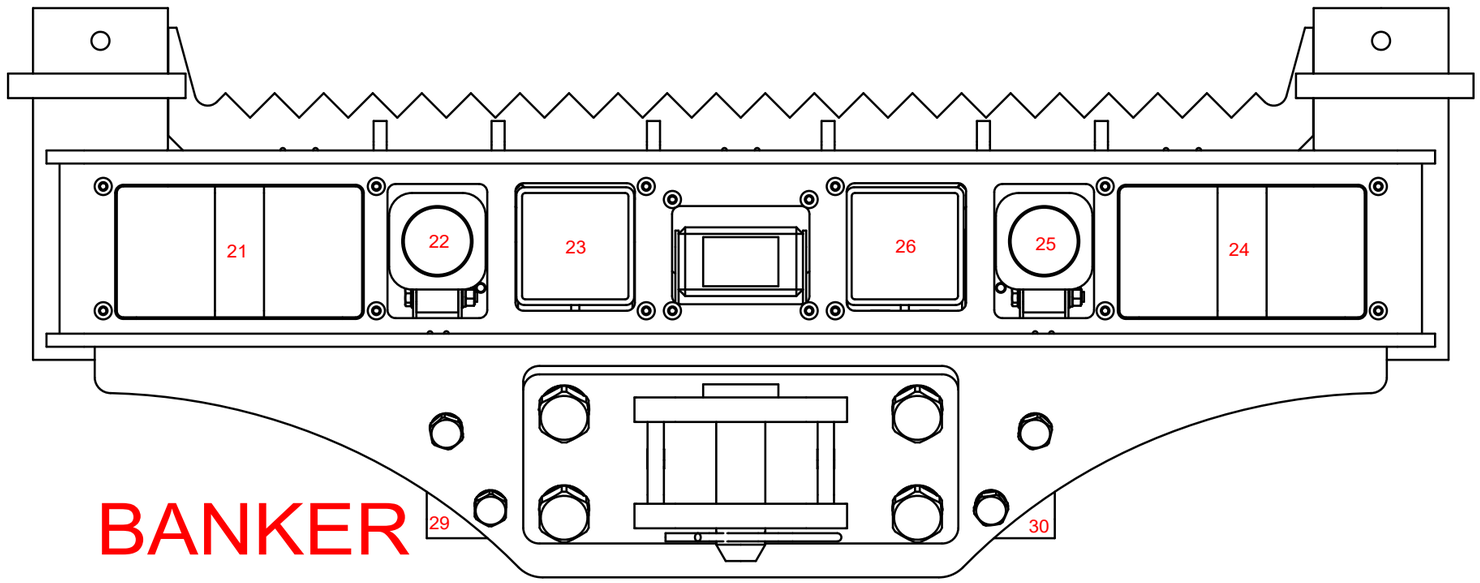

BANKER
LIGHT RAMP

D	Valves	2022-09-06	GS	date	2023-01-30	Model: Terri 3 Wheels	TERRI FOR ALL TERRAIN	TERRI 0476-70 97 90 www.terri.se	Drawing nr: 702832 =T3 +EXT
E	Radio/Eber	2022-01-27	CV	User	CV				
F	AngleSens	2023-01-30	CV	Proved	RH				Bäckgatan 32 34322 Älmhult — FLOOR AND BANKER VIEW — Sheet 19 / 62 Sh.
Status	change	date	name	Standard	InevTC	Origin F (702832)	Repl. f. E (702832)		

PANEL INSIDE CABIN

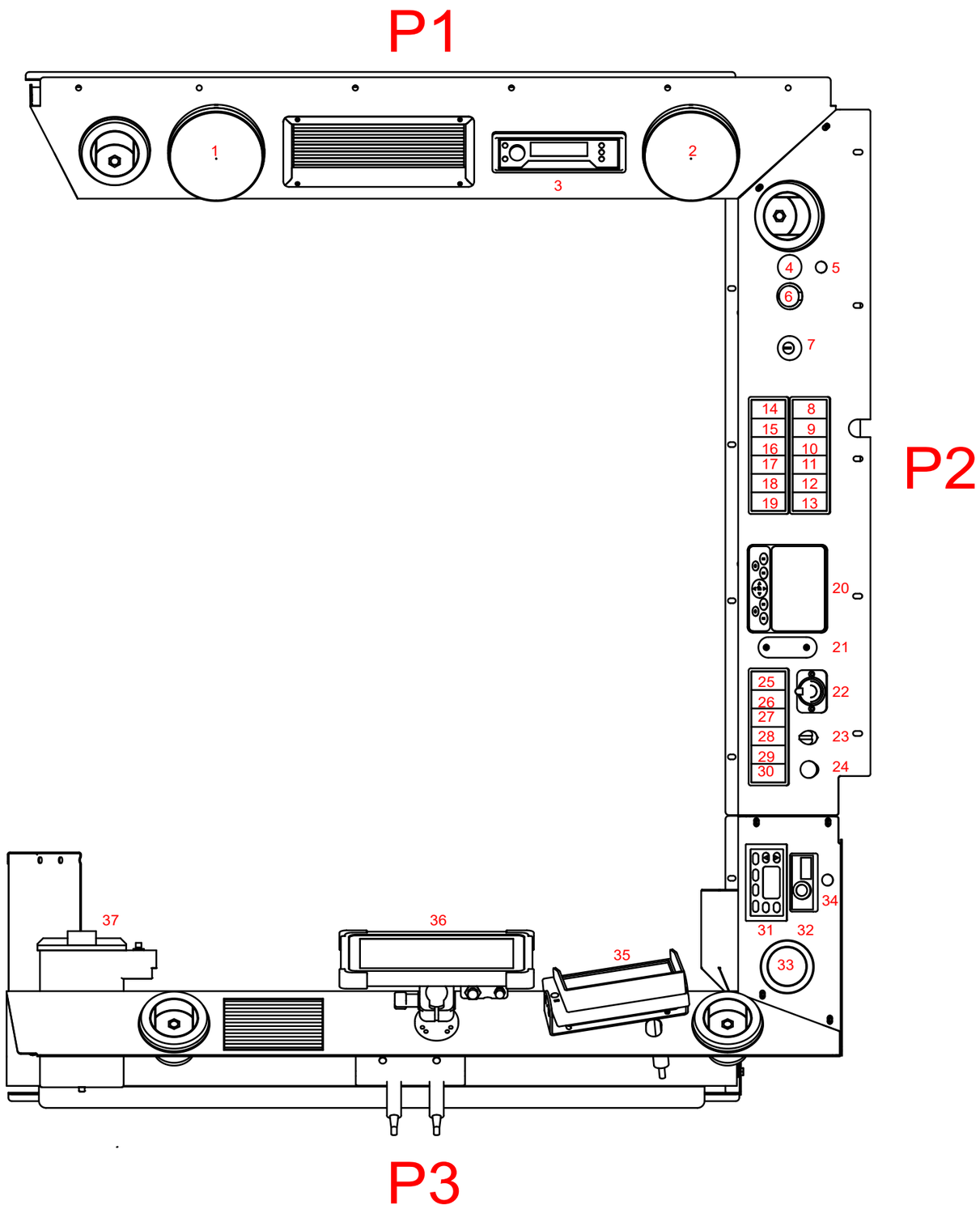

	+P1	
1	H1	s.111 Left speaker
2	H2	s.111 Right speaker
3	P8	s.111 Radio
	+P2	
4	S28	s.114 Fire test button
5	P2	s.114 Fire protection active light
6	X47	s.111 12 dc socket
7	S27	s.110 Ignition key switch
8	S1	s.103 Interior lighting
9	S2	s.103 Travel lighting
10	S3	s.103 Work lighting [Optional]
11	S4	s.103 Work lighting [Optional]
12	S5	s.103 Work lighting [Optional]
13	S6	s.103 Spare
14	S7	s.104 Horn
15	S8	s.104 Turn signal
16	S9	s.104 Seat heater
17	S10	s.104 Spare
18	S11	s.104 Rotatiion warning light
19	S12	s.104 Windshield wiper
20	K18	s.137 Screen machine computer
21	P7	s.109 Alarm light
22	X46	s.111 Usb socket
23	R14	s.110 Potentiometer
24	S26	s.112 Emergency stop
25	S13	s.105 Spare
26	S14	s.105 Spare
27	S15	s.105 Work lighting [Optional]
28	S16	s.105 Windscreen wipers and washers
29	S17/S20	s.105 Gear control
30	S18	s.105 Presence switch
31	K23	s.120 Ecc, control unit
32	K26	s.119 Easystart pro
33	P6	s.114 Fire alert light
34	S29/S30	s.119 Easystart web button [Optional]
	+P3	
35	P9	s.115 Reversing camera [Optional]
36	P1	s.113 Display computer logmate 510 [Optional]
37	E2	s.115 Food heater [Optional]

D	Valves	2022-09-06	GS	date	2023-01-30	Model: Terri 3 Wheels	TERRI FOR ALL TERRAIN	TERRI 0476-70 97 90 www.terri.se
E	Radio/Eber	2022-01-27	CV	User	CV			
F	AngleSens	2023-01-30	CV	Proved	RH			
Status	change	date	name	Standard	InevTC	Origin F (702832)	Repl. f. E (702832)	

Drawing nr: 702832 | =T3

Bäckgatan 32, 34322 Älmhult

PANEL BOARD VIEW

Sheet 20 / 62 Sh.

CABIN PANEL

P4

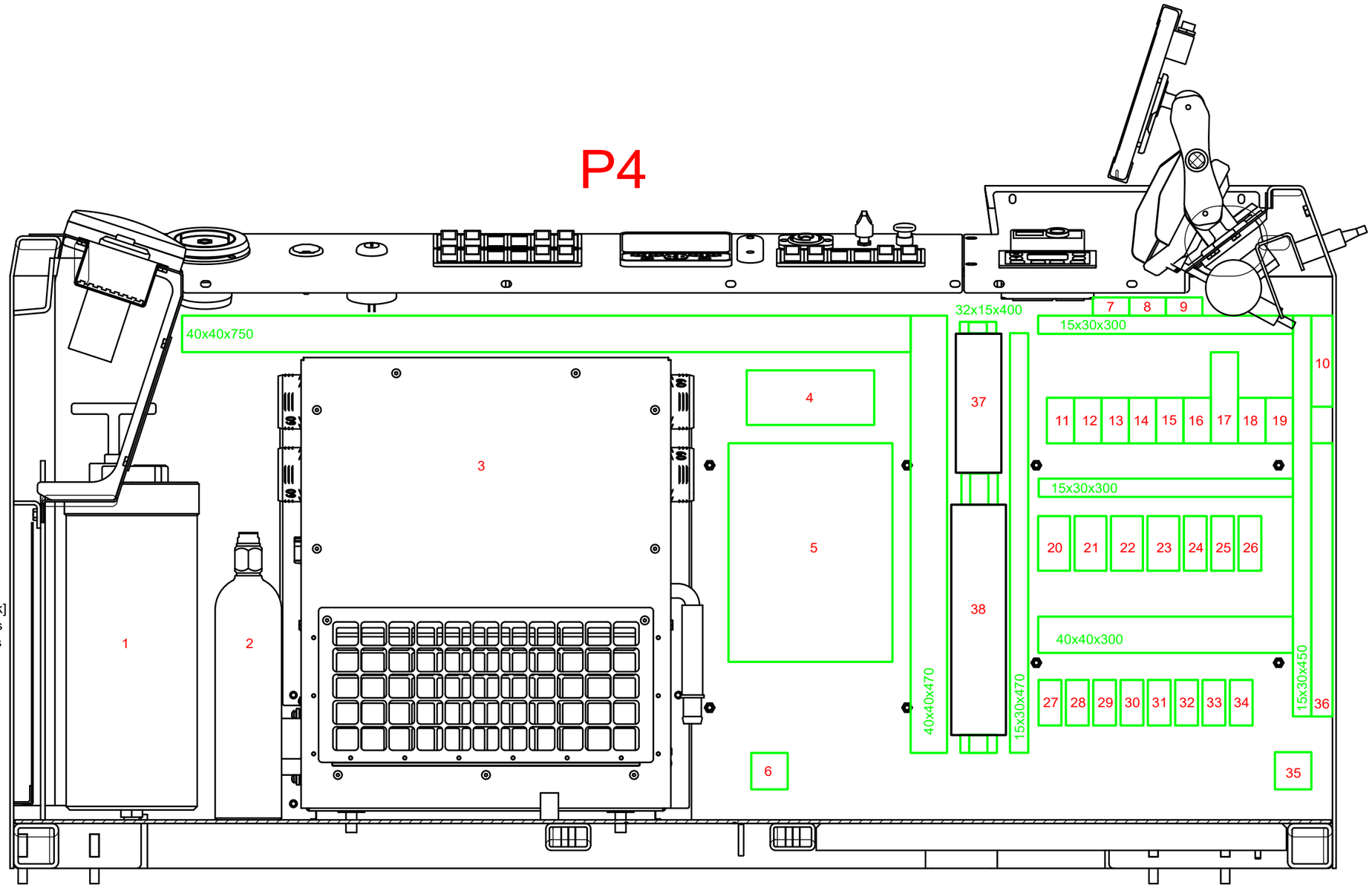

	+P4	
1	F21	s.114 Extingusher
2	F20	s.114 Pressure tank 24bar
3	X21	s.118 Airconditioning
4	U1	s.111 24V-12V DC Converter
5	K19	s.137 XL104-0000 Computer
6	x	s.119 Eberspächer Fuses F11-F13
7	ARB	s.123 Connector for work lights
8	X6	s.115 Connector for wipers
9	X25	s.118 Connector for ECC
10	K24/25	s.119 Eberspächer GSM or WEBB [Optional]
11	K1	s.101 Relay with 7,5A fuse for work light front and back
12	K2	s.101 Relay with 7,5A fuse for work light sides and [Optional back]
13	K3	s.101 Relay with 7,5A fuse for work light cab side down and sides
14	K4	s.101 Relay with 7,5A fuse for work light on crane and extra lights
15	K5	s.101 Relay with 20A fuse for condensation fan
16	K6	s.101 Alternating relay for wipers
17	K7	s.101 Alternating relay for indicator lights
18	K8	s.101 Alternating relay for fuel pump
19	K9	s.101 Eberspächer help relay
20	K10	s.102 Relay for ignition limited
21	K11	s.102 Relay for ignition permanent
22	K12	s.102 Relay for ignition
23	K13	s.102 Relay for ECU
24	K14	s.102 Relay for start
25	K15	s.102 Relay with 20A fuse for ECC R1
26	K16	s.102 Relay with 5A fuse for ECC R2
27	F3	s.110 Fuse F3 60A for fuses 50-55
28	F4	s.110 Fuse F4 60A for ignition limited
29	F5	s.110 Fuse F5 40A for ignition permanent
30	F6	s.110 Fuse F6 30A for ignition
31	F7	s.110 Fuse F7 40A for ECU
32	F8	s.110 Fuse F8 30A for start
33	F9	s.110 Fuse F9 xA
34	F10	s.110 Fuse F10 40A for ECC and fuses F11-13 and F31
35	X14	s.116 Connector for chair
36	x	s.112-113 Logmax computer [Optional]
37	x	s.106-107 Terminals 1-24
38	x	s.108-109 Fuse Terminals 31-56

D	Valves	2022-09-06	GS	date	2023-01-30	Model: Terri 3 Wheels	TERRI FOR ALL TERRAIN	TERRI 0476-70 97 90 www.terri.se	Drawing nr: 702832 =T3 +P4
E	Radio/Eber	2022-01-27	CV	User	CV				
F	AngleSens	2023-01-30	CV	Proved	RH				Bäckgatan 32 34322 Älmhult — PANEL VIEW — Sheet 21 / 62 Sh.
Status	change	date	name	Standard	InevTC	Origin F (702832)	Repl. f. E (702832)		

CABIN FLOOR INSIDE

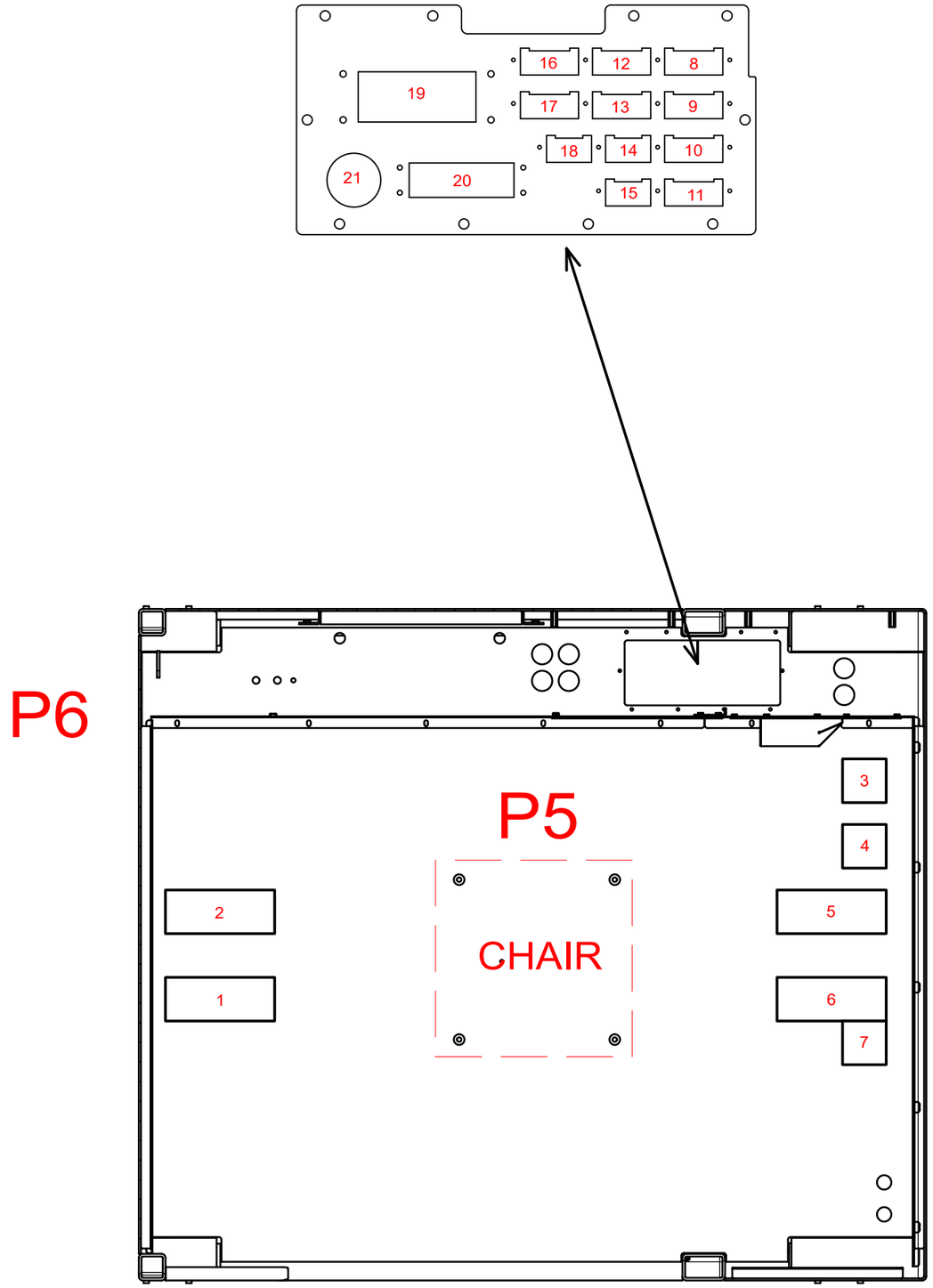

	+P6	
1	R12	s.121 Brake pedal (Forward)
2	R13	s.121 Gas pedal (Forward)
3	S31	s.121 Waist lock pedal
4	*	
5	R10	s.121 Brake pedal (Back)
6	R11	s.121 Gas pedal (Back)
7	S32	s.121 Inversion pedal
8	A1	s.124 A1 : Valves
9	A2	s.125 A2 : Valves
10	A3	s.126 A3 : Sensors
11	A4	s.127 A4 : Cooling (AC)
12	A5	s.128 A5 : Light, pump horn
13	A6	s.129 A6 : Trailer
14	A7	s.130 A7 : Driving valves (LF)
15	A8	s.131 A8 : Driving valves (RF)
16	A9	s.132 A9 : Driving valves (LB)
17	A10	s.133 A10 : Driving valves (RB)
18	A11	s.134 A11 : Extra
19	A12	s.135 A12 : Cat motor
20	A13	s.136 A13 : Hydraulik sensors
21	A14	: Implementation for, 1pce 16mm orange and 1pce 6mm red

D	Valves	2022-09-06	GS	date	2023-01-30	Model: Terri 3 Wheels	TERRI FOR ALL TERRAIN	TERRI 0476-70 97 90 www.terri.se	Drawing nr: 702832 =T3 +P6
E	Radio/Eber	2022-01-27	CV	User	CV				
F	AngleSens	2023-01-30	CV	Proved	RH				Bäckgatan 32 34322 Älmhult — FLOOR VIEW — Sheet 22 / 62 Sh.
Status	change	date	name	Standard	InevTC	Origin F (702832) Repl. f. E (702832)			

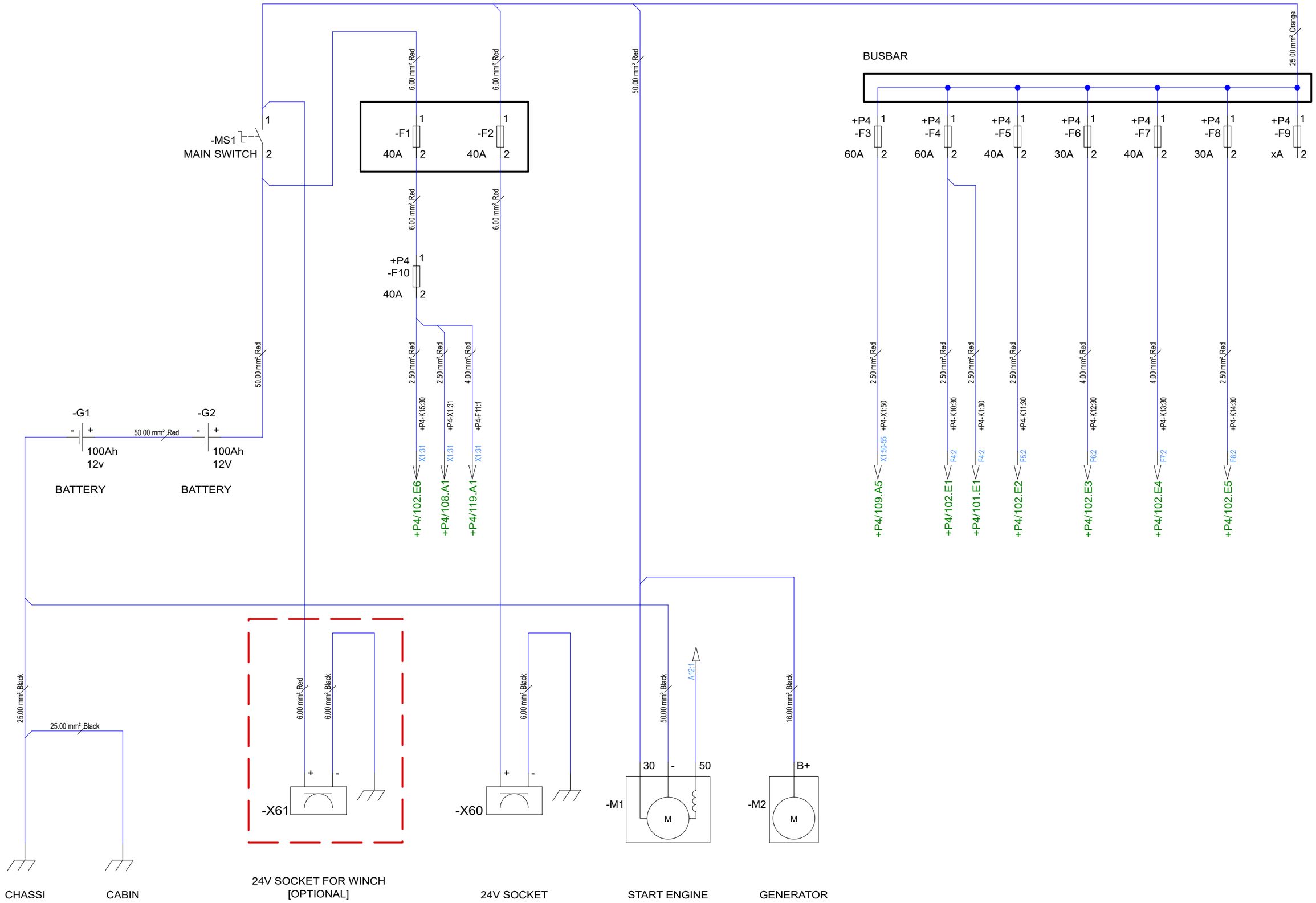

D	Valves	2022-09-06	GS	date	2023-01-30	Model: Terri 3 Wheels		TERRI FOR ALL TERRAIN	TERRI 0476-70 97 90 www.terri.se	Drawing nr: 702832	=T3
E	Radio/Eber	2022-01-27	CV	User	CV						+EXT
F	AngleSens	2023-01-30	CV	Proved	RH					Bäckgatan 32 34322 Älmhult	MAIN CIRCUIT DIAGRAM
Status	change	date	name	Standard	InevTC	Origin F (702832)	Repl. f. E (702832)				Sheet 100 / 62 Sh.

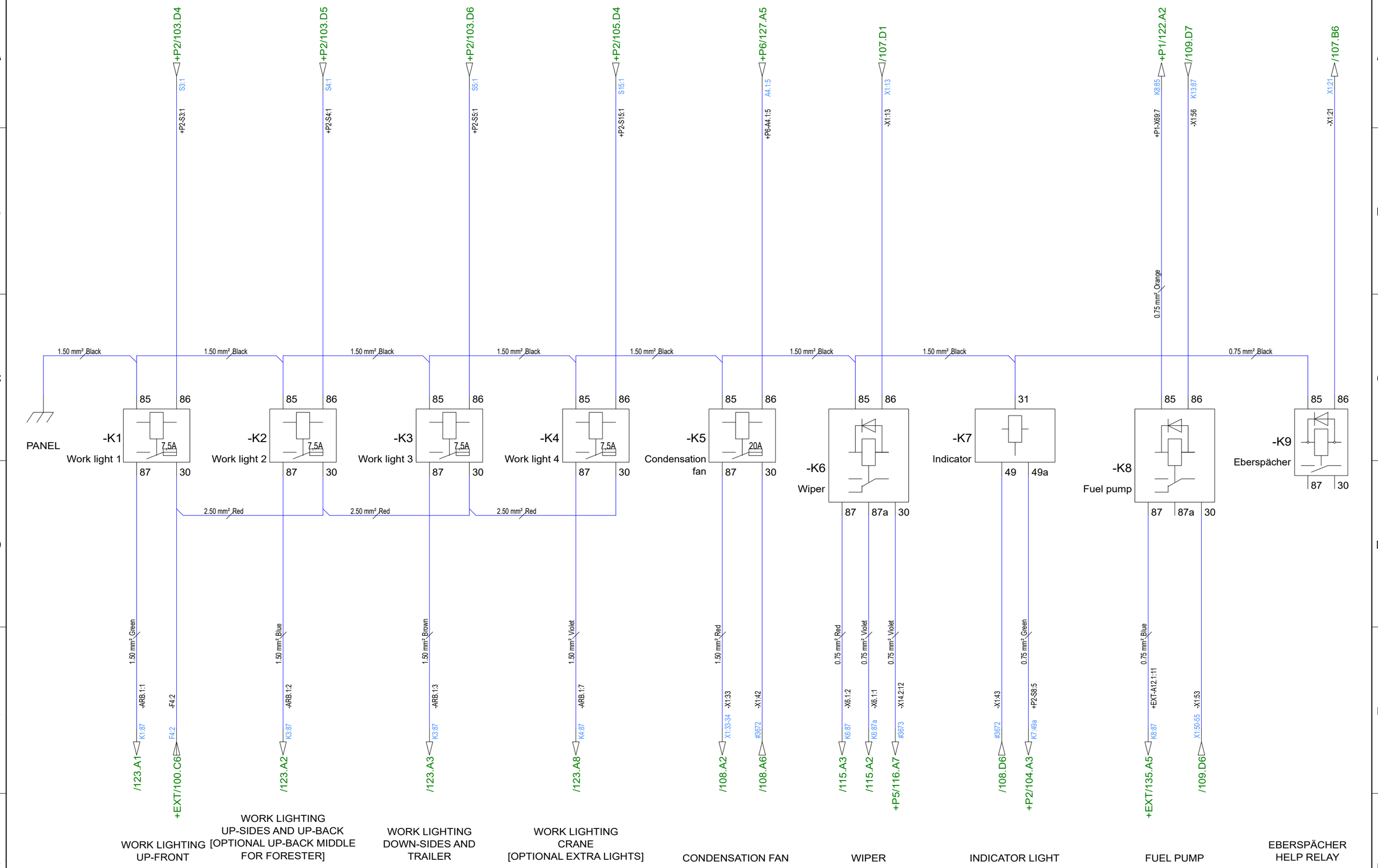

D	Valves	2022-09-06	GS	date	2023-01-30	Model: Terri 3 Wheels	TERRI FOR ALL TERRAIN	TERRI 0476-70 97 90 www.terri.se	Drawing nr: 702832 =T3 +P4
E	Radio/Eber	2022-01-27	CV	User	CV				Bäckgatan 32 34322 Älmhult
F	AngleSens	2023-01-30	CV	Proved	RH				RELAY K1-K9
Status	change	date	name	Standard	InevTC	Origin F (702832)	Repl. f. E (702832)		Sheet 101 62 Sh.

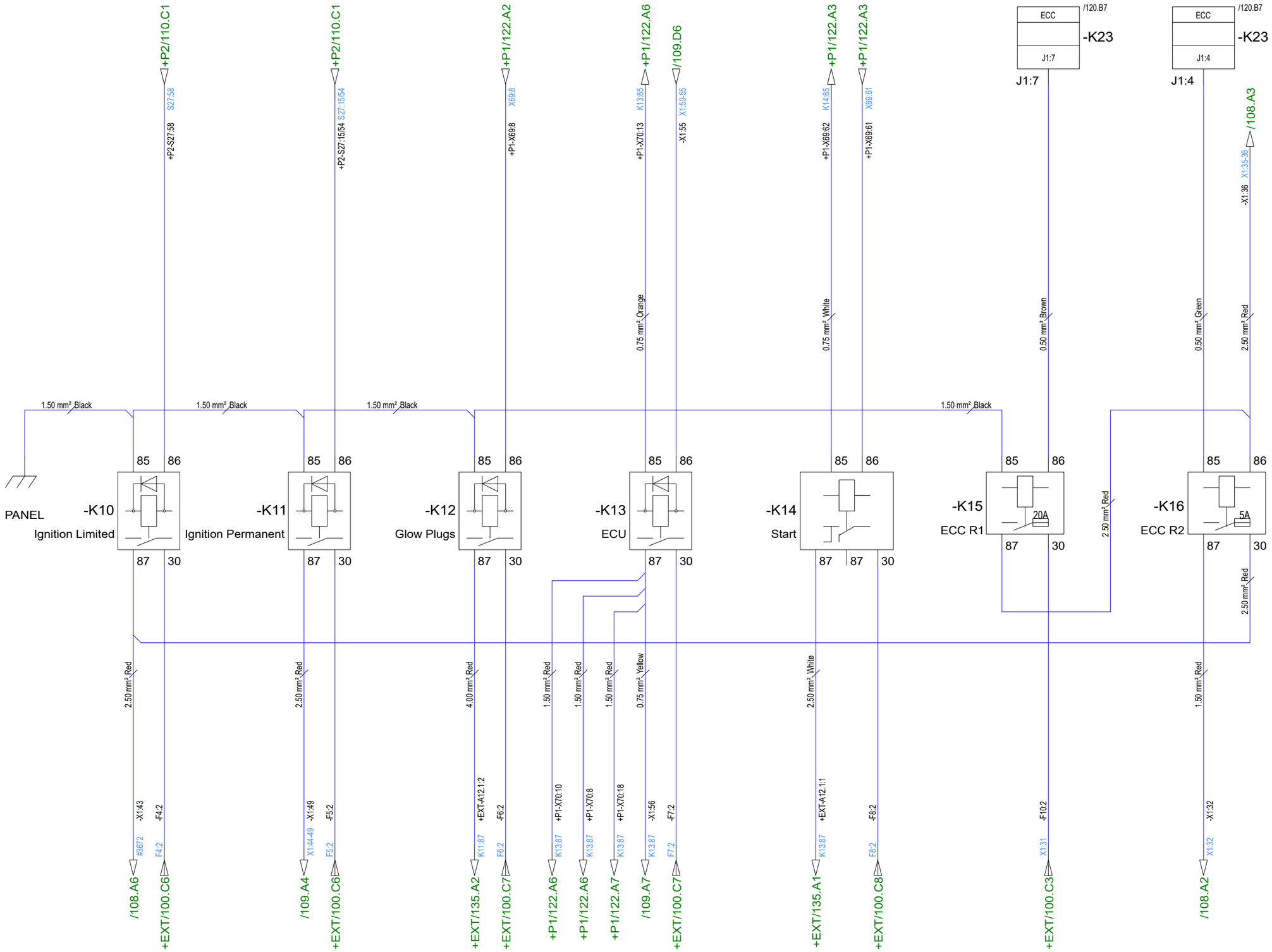

D	Valves	2022-09-06	GS	date	2023-01-30	Model: Terri 3 Wheels	TERRI FOR ALL TERRAIN	TERRI 0476-70 97 90 www.terri.se	Drawing nr: 702832 =T3 +P4
E	Radio/Eber	2022-01-27	CV	User	CV				
F	AngleSens	2023-01-30	CV	Proved	RH				Bäckgatan 32 34322 Älmhult
Status	change	date	name	Standard	InevTC	Origin F (702832)	Repl. f. E (702832)		RELAY K10-K16

Sheet 102 / 62 Sh.

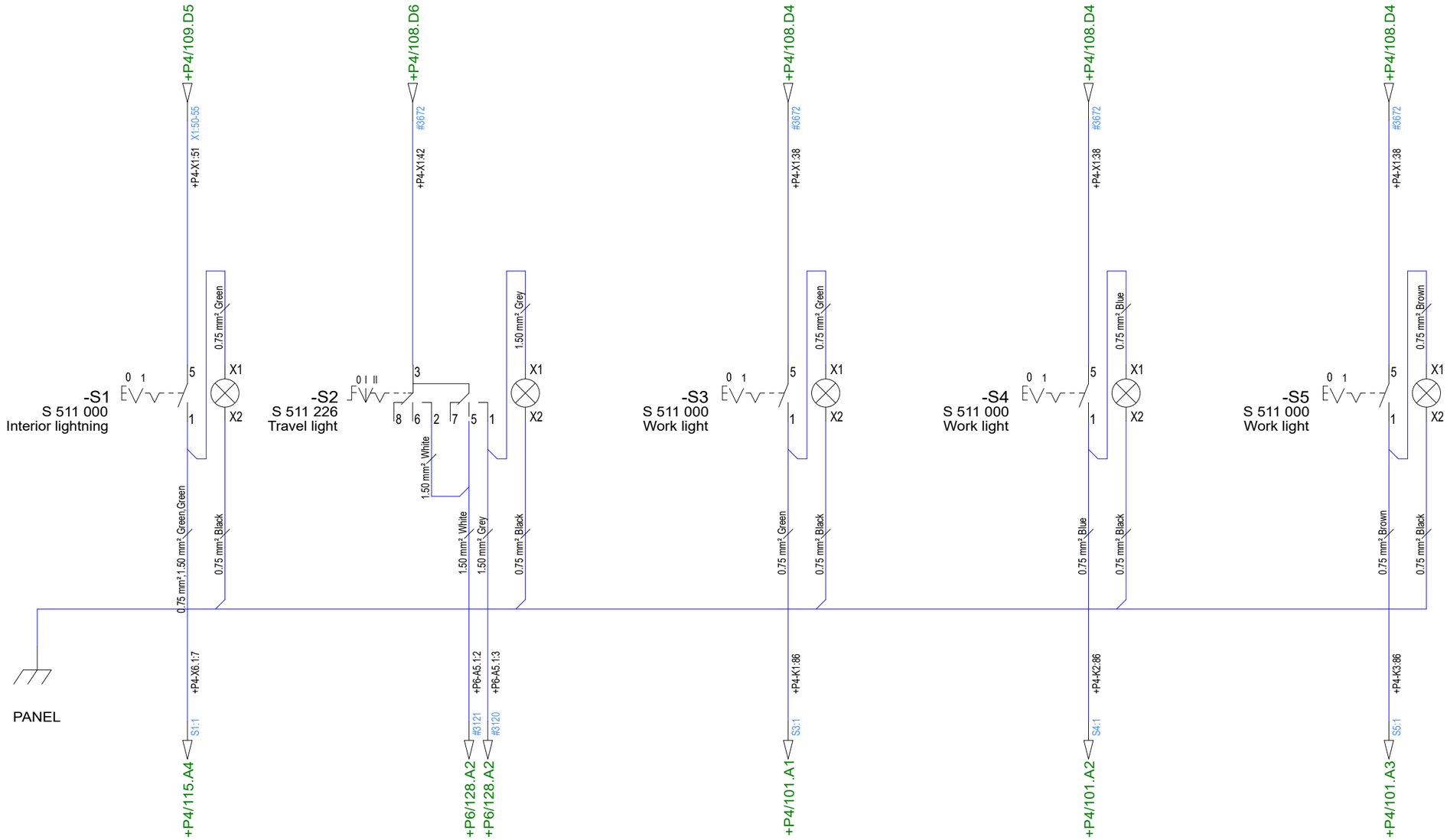

INTERIOR LIGHTNING

TRAVEL LIGHT

WORK LIGHTING
FRONT AND BACK

WORK LIGHTING
SIDES AND
[OPTIONAL BACK]

WORK LIGHTING
CAB SIDE DOWN AND
SIDES

SPARE

D	Valves	2022-09-06	GS	date	2023-01-30	Model: Terri 3 Wheels	TERRI FOR ALL TERRAIN	TERRI 0476-70 97 90 www.terri.se	Drawing nr: 702832 =T3 +P2
E	Radio/Eber	2022-01-27	CV	User	CV				
F	AngleSens	2023-01-30	CV	Proved	RH				Bäckgatan 32 34322 Älmhult
Status	change	date	name	Standard	InevTC	Origin F (702832) Repl. f. E (702832)			SWITCHES S1-S6 Sheet 103 62 Sh.

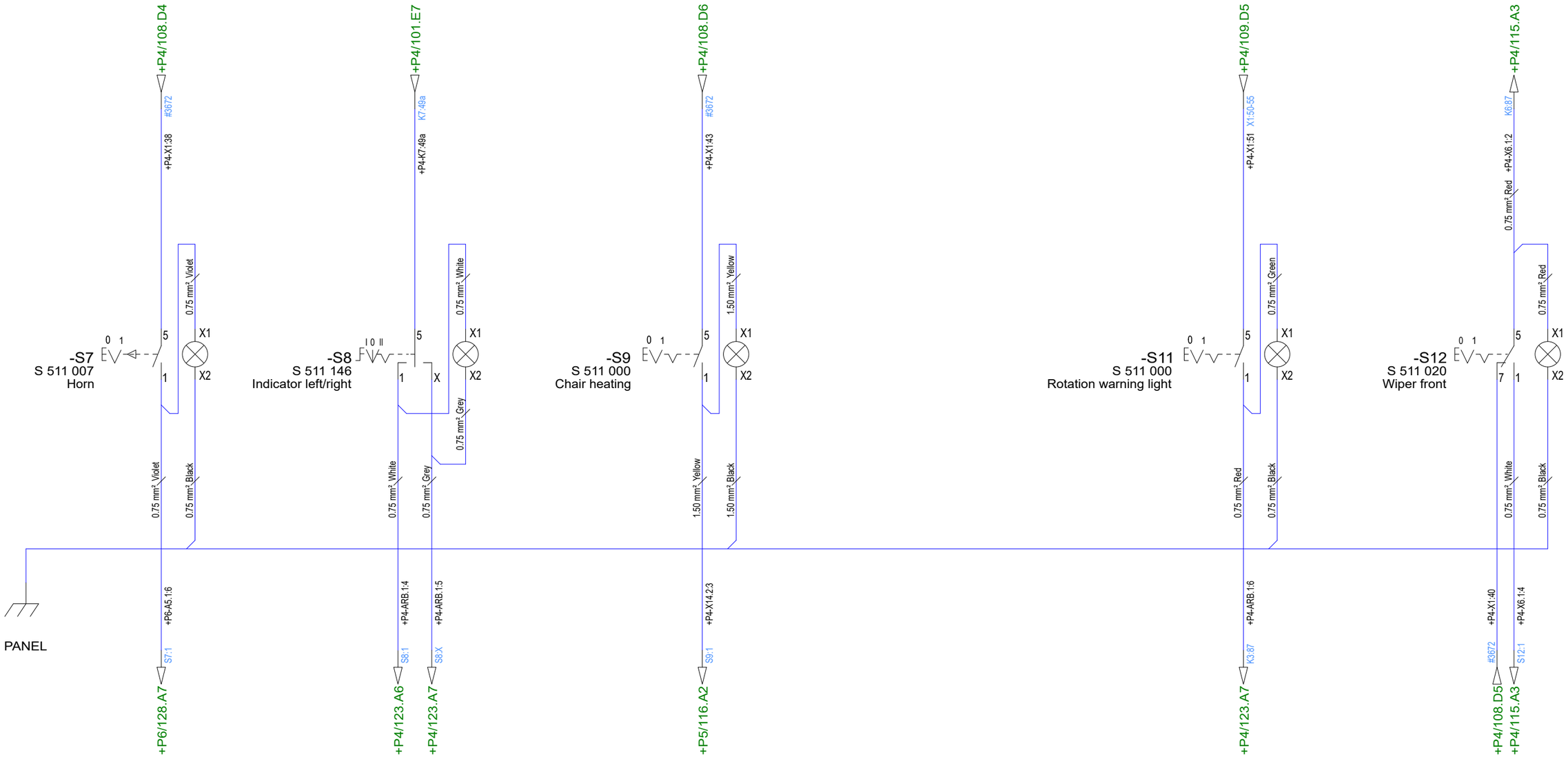

HORN | INDICATOR LEFT/RIGHT | CHAIR HEATING | SPARE | ROTATION WARNING LIGHT | WIPER FRONT

D	Valves	2022-09-06	GS	date	2023-01-30	Model: Terri 3 Wheels	TERRI FOR ALL TERRAIN	TERRI 0476-70 97 90 www.terri.se	Drawing nr: 702832 =T3 +P2
E	Radio/Eber	2022-01-27	CV	User	CV				
F	AngleSens	2023-01-30	CV	Proved	RH				Bäckgatan 32 34322 Älmhult
Status	change	date	name	Standard	InevTC	Origin F (702832) Repl. f. E (702832)			SWITCHES S7-S12
									Sheet 104 62 Sh.

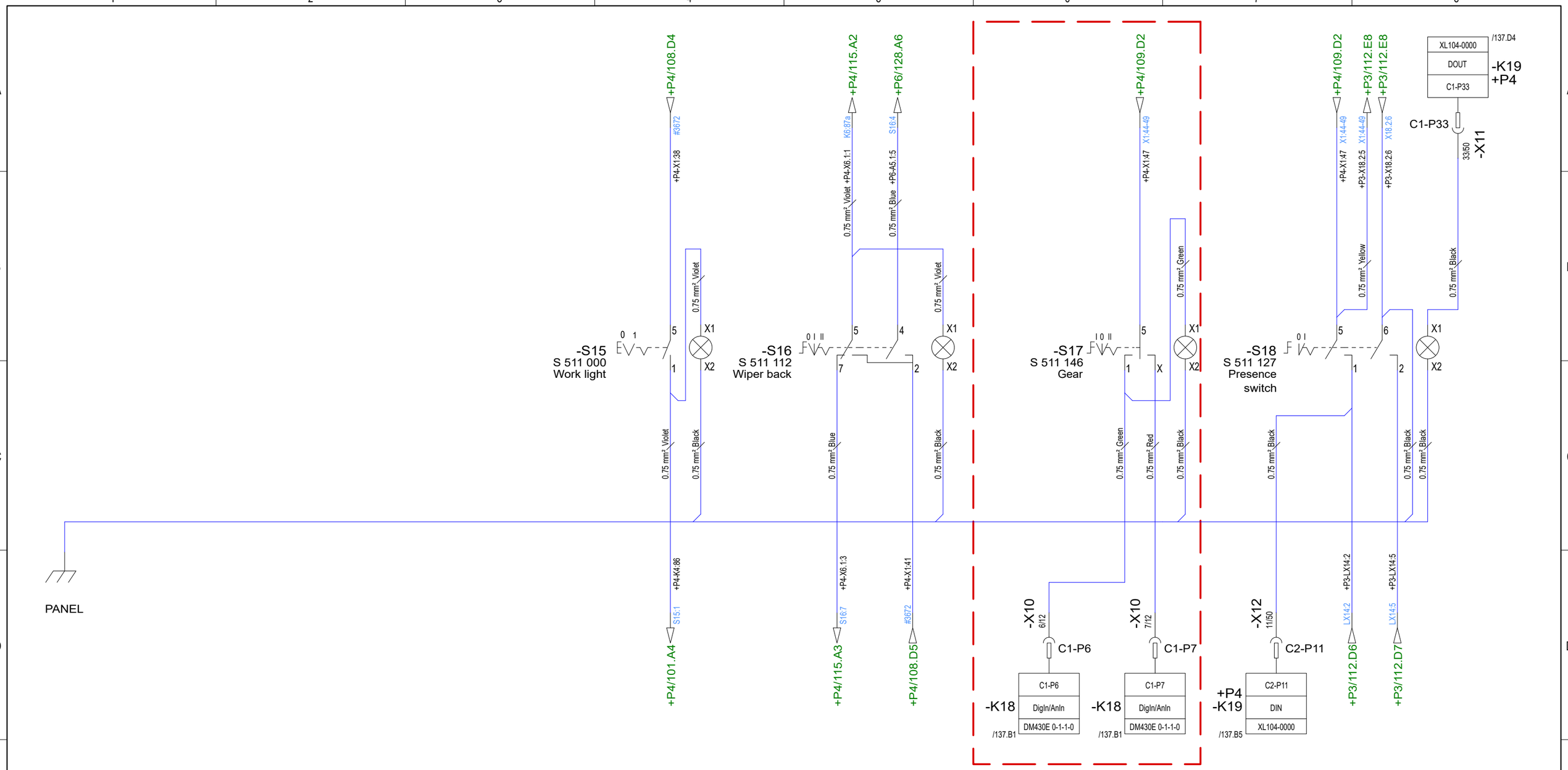

SPARE

SPARE

WORK LIGHTING
CRANE AND EXTRA

WIPER BACK

GEAR
[OPTIONAL]
[WHEELS OR TRACKS]

PRESENCE SWITCH

D	Valves	2022-09-06	GS	date	2023-01-30	Model: Terri 3 Wheels	TERRI FOR ALL TERRAIN	TERRI 0476-70 97 90 www.terri.se	Drawing nr: 702832 =T3 +P2
E	Radio/Eber	2022-01-27	CV	User	CV				
F	AngleSens	2023-01-30	CV	Proved	RH				Bäckgatan 32 34322 Älmhult
Status	change	date	name	Standard	InevTC	Origin F (702832) Repl. f. E (702832)			SWITCHES S13-S20

Sheet 105 / 62 Sh.

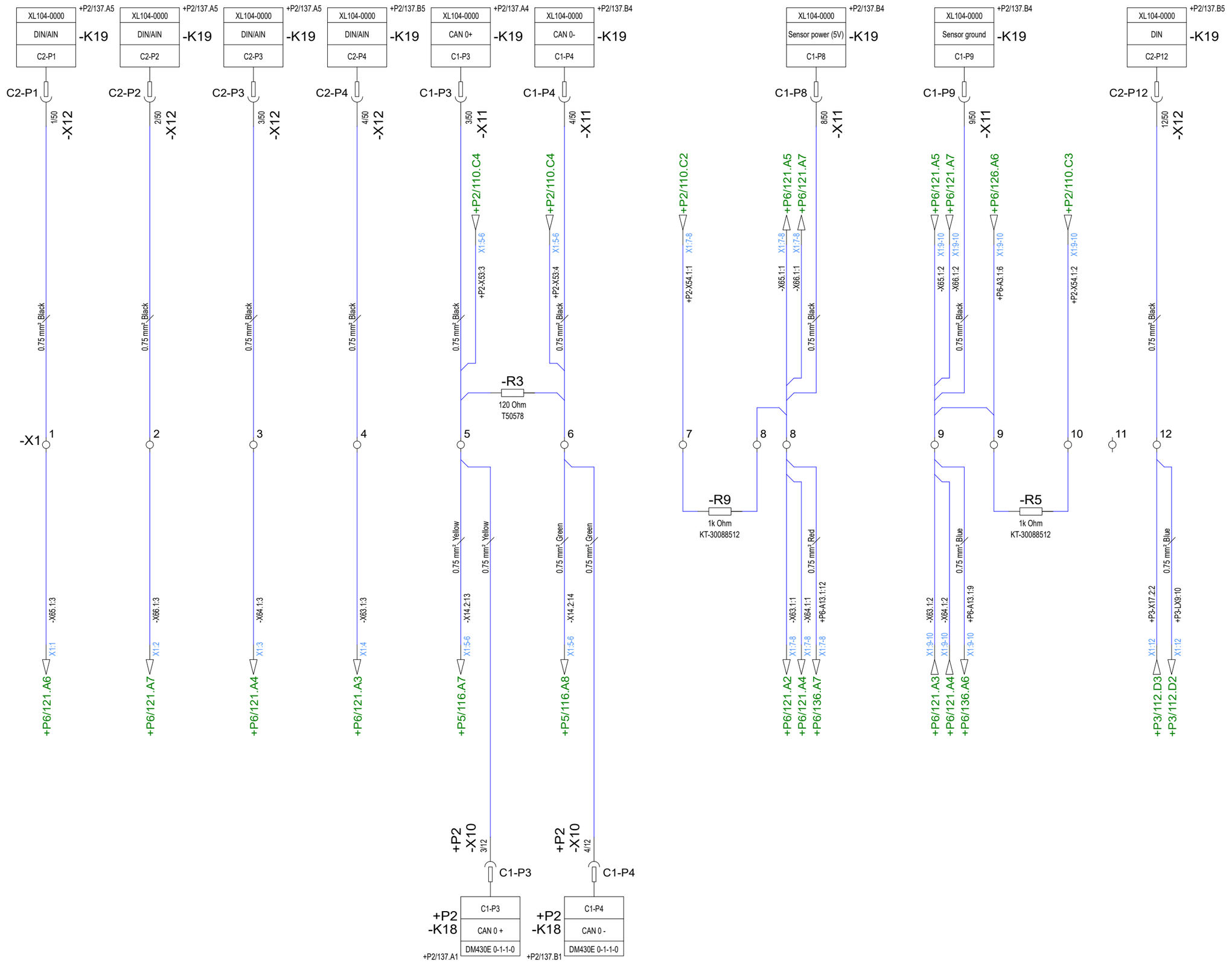

D	Valves	2022-09-06	GS	date	2023-01-30	Model: Terri 3 Wheels	TERRI FOR ALL TERRAIN	TERRI 0476-70 97 90 www.terri.se	Drawing nr: 702832 =T3 +P4
E	Radio/Eber	2022-01-27	CV	User	CV				Bäckgatan 32 34322 Älmhult
F	AngleSens	2023-01-30	CV	Proved	RH				TERMINALS X1:1-12
Status	change	date	name	Standard	InevTC	Origin F (702832)	Repl. f. E (702832)		Sheet 106 / 62 Sh.

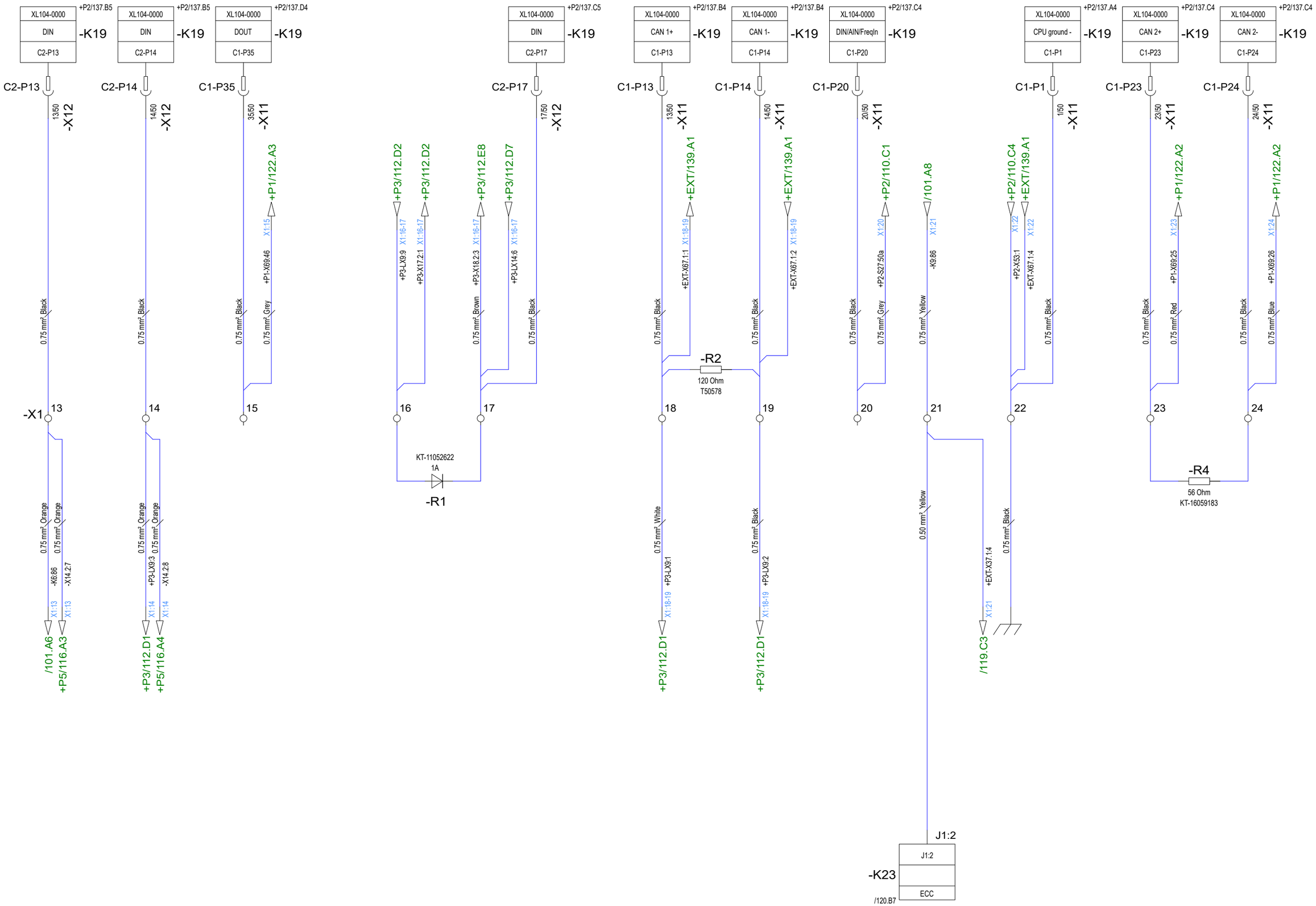

D	Valves	2022-09-06	GS	date	2023-01-30	Model: Terri 3 Wheels	TERRI FOR ALL TERRAIN	TERRI 0476-70 97 90 www.terri.se	Drawing nr: 702832 =T3 +P4
E	Radio/Eber	2022-01-27	CV	User	CV				
F	AngleSens	2023-01-30	CV	Proved	RH				Bäckgatan 32 34322 Älmhult
Status	change	date	name	Standard	InevTC	Origin F (702832)	Repl. f. E (702832)		TERMINALS X1:13-24

Sheet 107 / 62 Sh.

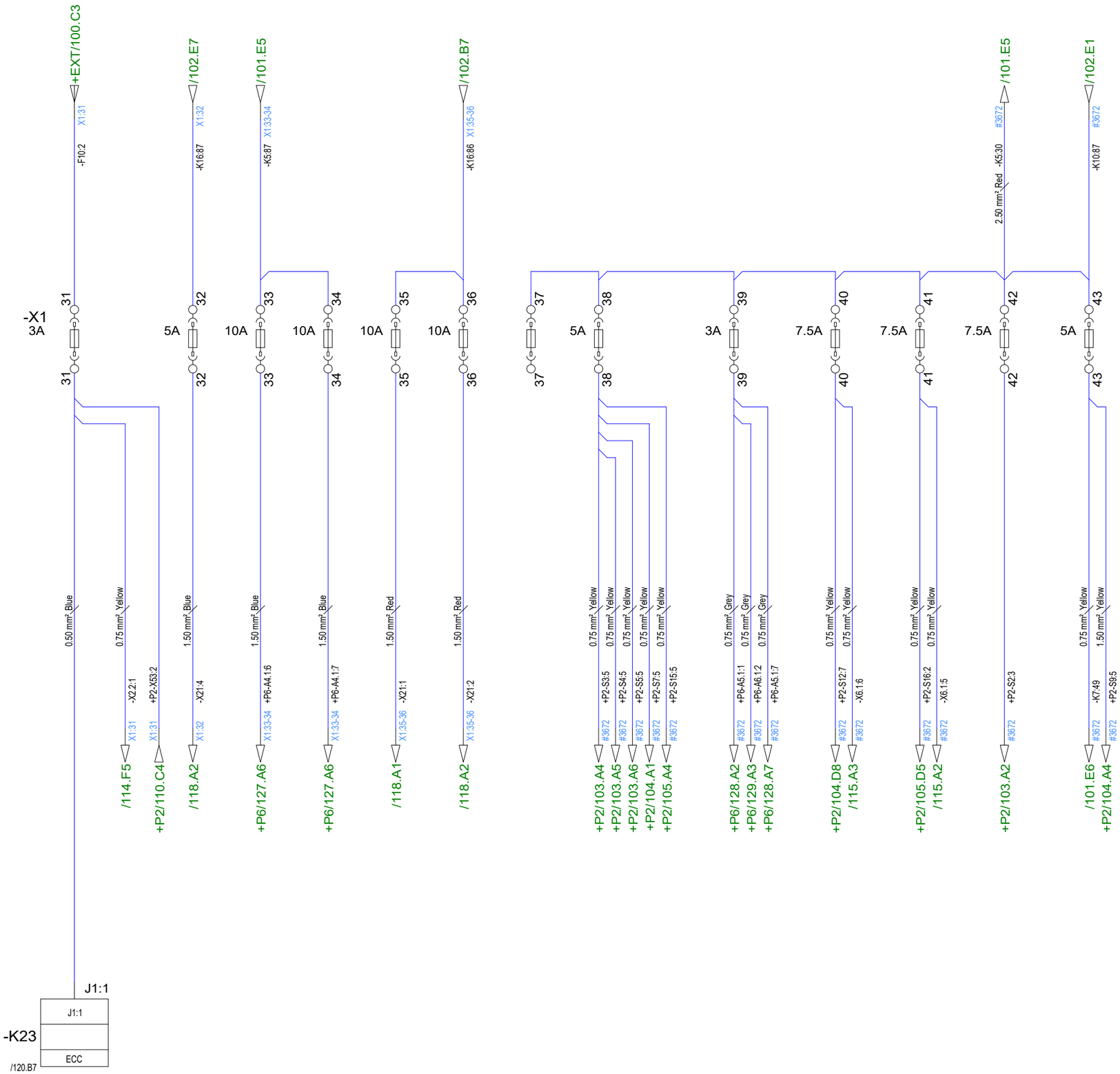

D	Valves	2022-09-06	GS	date	2023-01-30	Model: Terri 3 Wheels	TERRI FOR ALL TERRAIN	TERRI 0476-70 97 90 www.terri.se	Drawing nr: 702832 =T3 +P4
E	Radio/Eber	2022-01-27	CV	User	CV				
F	AngleSens	2023-01-30	CV	Proved	RH				Bäckgatan 32 34322 Älmhult
Status	change	date	name	Standard	InevTC	Origin F (702832)	Repl. f. E (702832)		TERMINAL FUSES X1:31-43

Sheet 108 / 62 Sh.

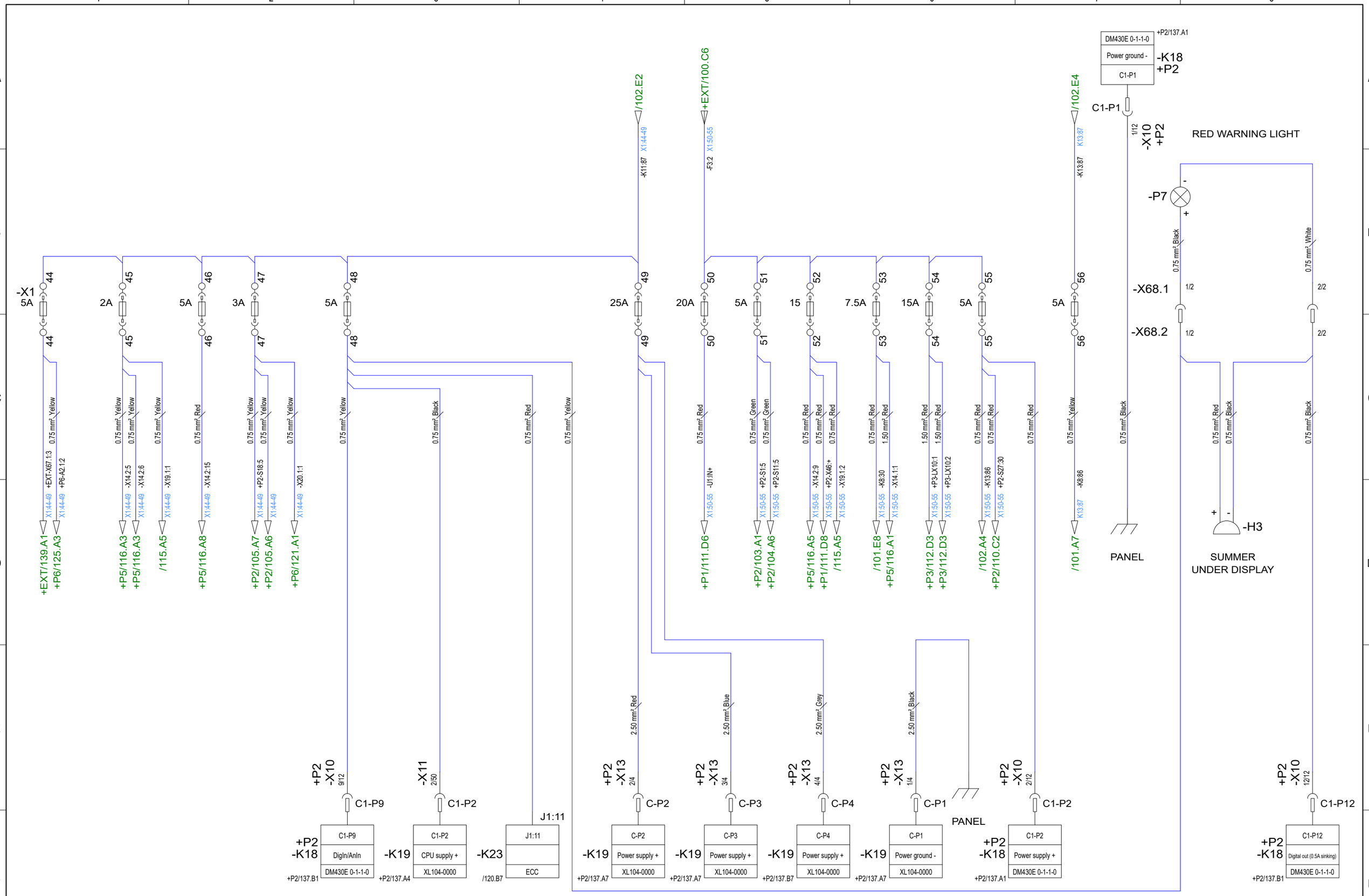

D	Valves	2022-09-06	GS	date	2023-01-30
E	Radio/Eber	2022-01-27	CV	User	CV
F	AngleSens	2023-01-30	CV	Proved	RH
Status	change	date	name	Standard	InevTC

Model: Terri 3 Wheels

Origin F (702832) Repl. f. E (702832)

TERRI FOR ALL TERRAIN

TERRI
0476-70 97 90
www.terri.se

Bäckgatan 32
34322 Älmhult

Drawing nr: 702832

=T3
+P4

TERMINAL FUSES X1:44-56

Sheet 109
62 Sh.

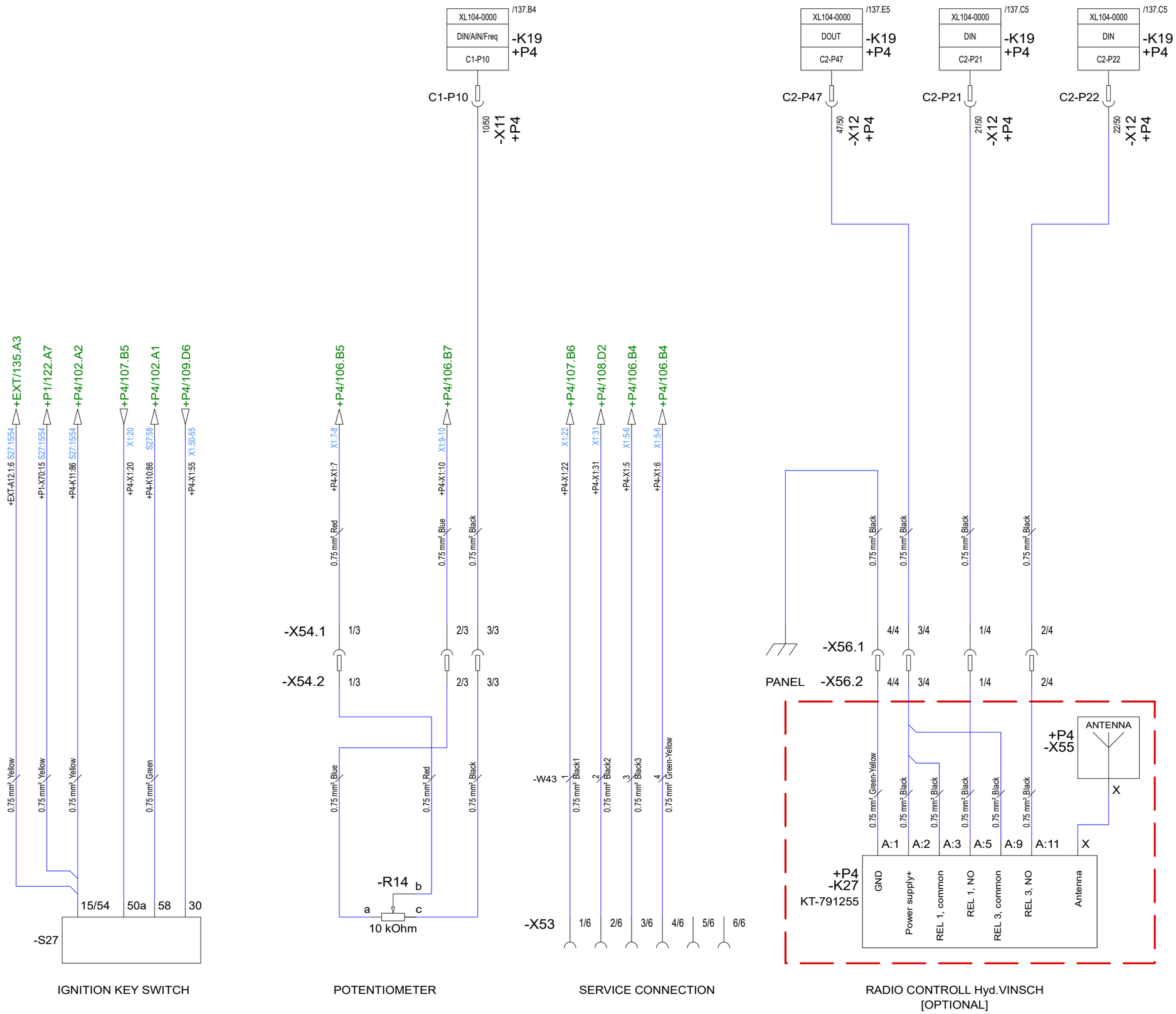

IGNITION KEY SWITCH

POTENTIOMETER

SERVICE CONNECTION

RADIO CONTROLL Hyd.VINSCH
[OPTIONAL]

D	Valves	2022-09-06	GS	date	2023-01-30	Model: Terri 3 Wheels		TERRI FOR ALL TERRAIN	TERRI 0476-70 97 90 www.terri.se	Drawing nr: 702832	=T3
E	Radio/Eber	2022-01-27	CV	User	CV						+P2
F	AngleSens	2023-01-30	CV	Proved	RH					Bäckgatan 32 34322 Älmhult	MIXED THINGS
Status	change	date	name	Standard	InevTC	Origin F (702832)	Repl. f. E (702832)				Sheet 110 / 62 Sh.

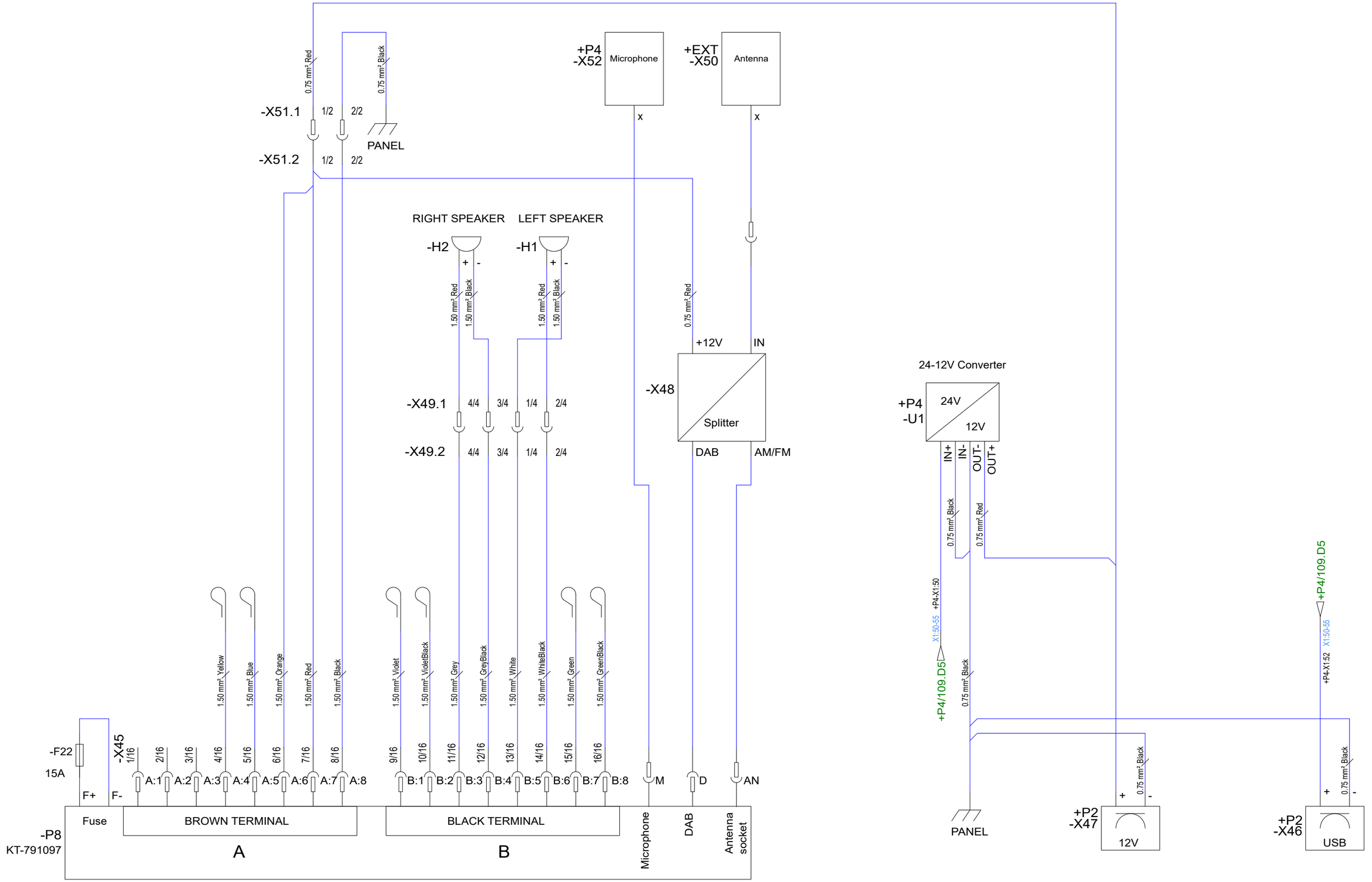

D	Valves	2022-09-06	GS	date	2023-01-30	Model: Terri 3 Wheels		TERRI FOR ALL TERRAIN	TERRI 0476-70 97 90 www.terri.se	Drawing nr: 702832	=T3
E	Radio/Eber	2022-01-27	CV	User	CV						+P1
F	AngleSens	2023-01-30	CV	Proved	RH					Bäckgatan 32 34322 Älmhult	RADIO, 12V SOCKET AND USB
Status	change	date	name	Standard	InevTC	Origin F (702832)	Repl. f. E (702832)				Sheet 111 / 62 Sh.

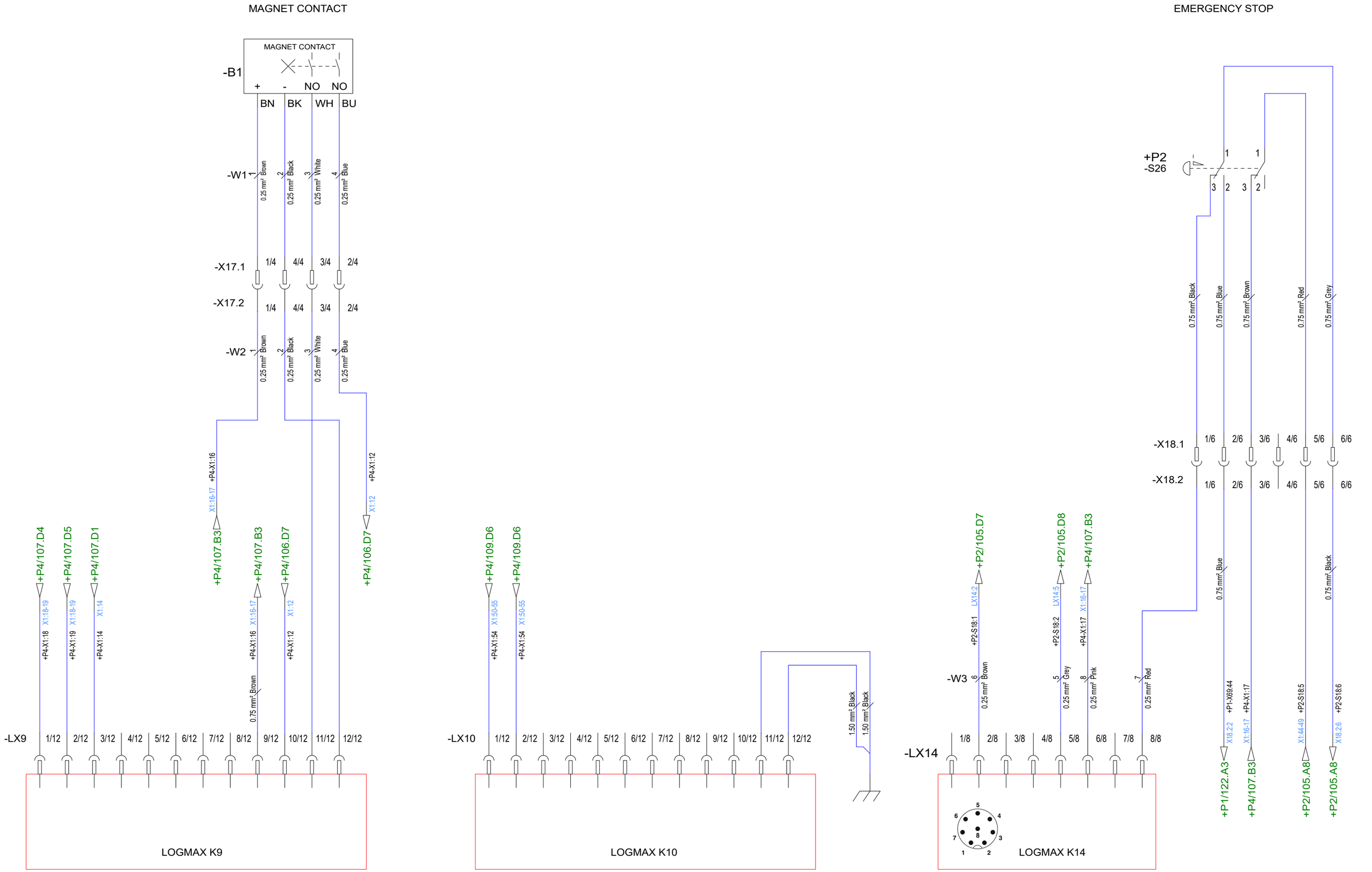

D	Valves	2022-09-06	GS	date	2023-01-30	Model: Terri 3 Wheels	TERRI FOR ALL TERRAIN	TERRI 0476-70 97 90 www.terri.se	Drawing nr: 702832	=T3	
E	Radio/Eber	2022-01-27	CV	User	CV					+P3	
F	AngleSens	2023-01-30	CV	Proved	RH				Bäckgatan 32 34322 Älmhult	LOGMAX K9, K10, K14	Sheet 112
Status	change	date	name	Standard	InevTC	Origin F (702832)	Repl. f. E (702832)				62 Sh.

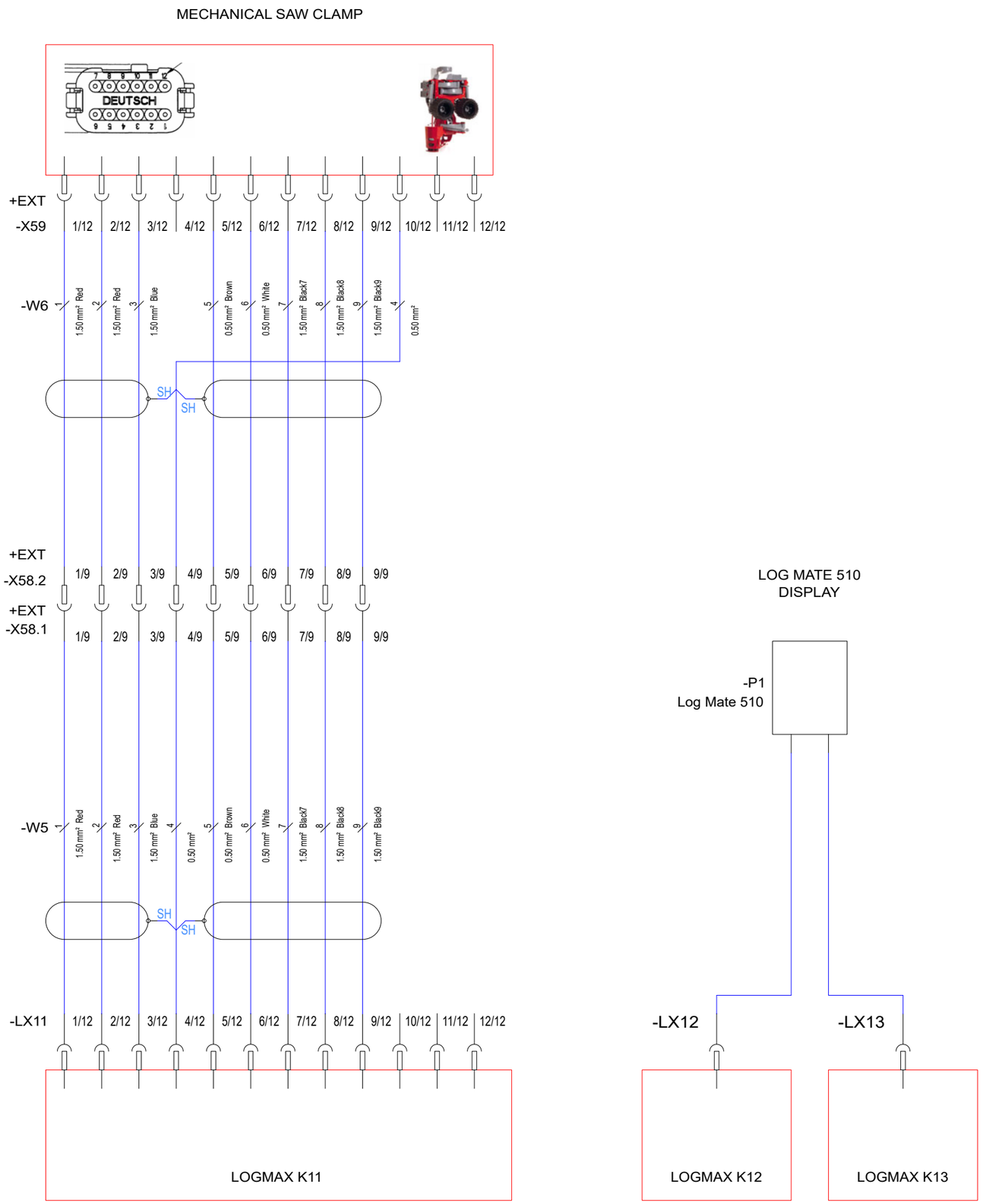

D	Valves	2022-09-06	GS	date	2023-01-30	Model: Terri 3 Wheels		TERRI FOR ALL TERRAIN	TERRI 0476-70 97 90 www.terri.se	Drawing nr: 702832	=T3
E	Radio/Eber	2022-01-27	CV	User	CV						+P3
F	AngleSens	2023-01-30	CV	Proved	RH					Bäckgatan 32 34322 Älmhult	LOGMAX K11, K12, K13
Status	change	date	name	Standard	InevTC	Origin F (702832)	Repl. f. E (702832)				Sheet 113 / 62 Sh.

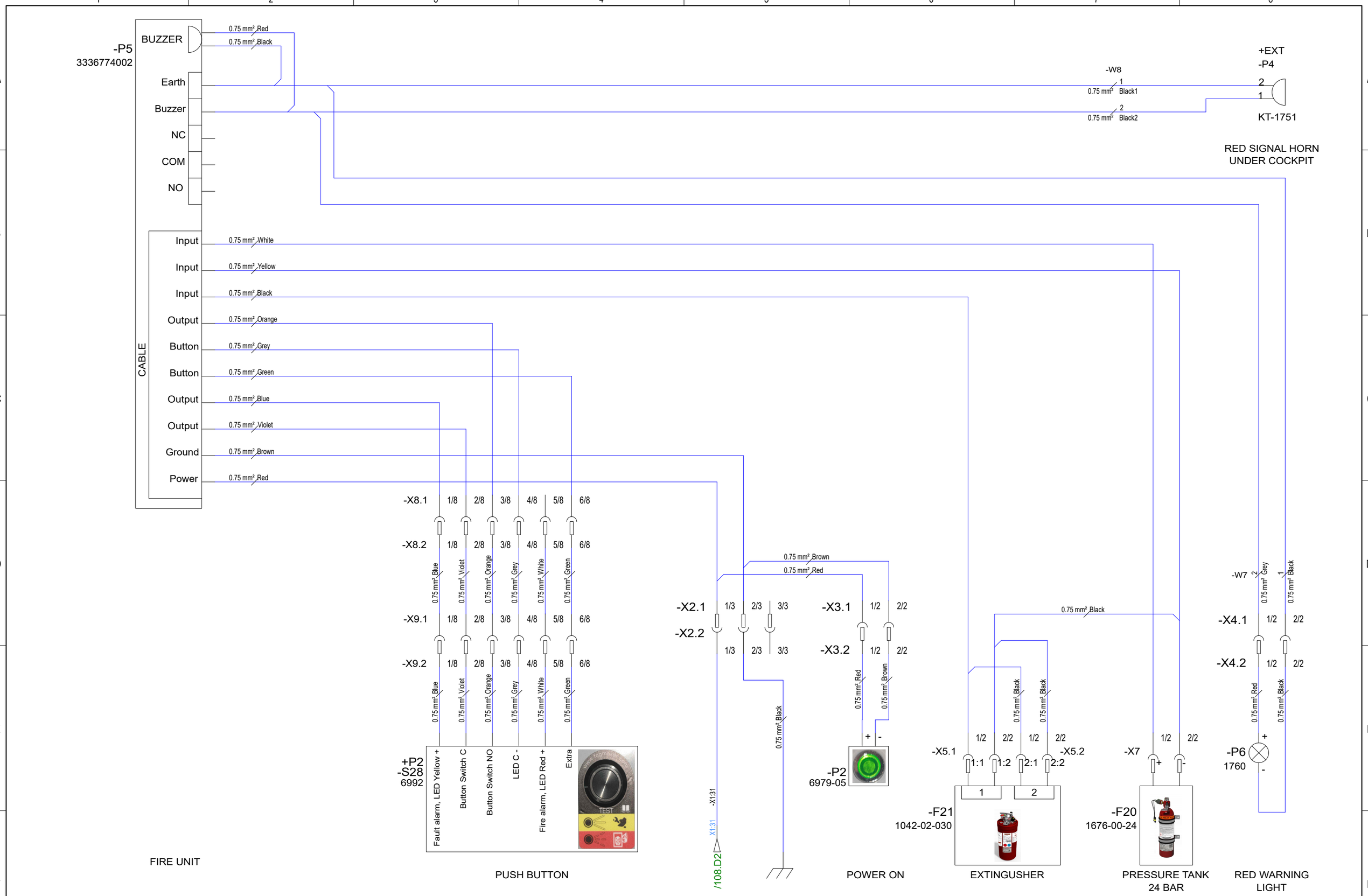

D	Valves	2022-09-06	GS	date	2023-01-30	Model: Terri 3 Wheels	TERRI FOR ALL TERRAIN	TERRI 0476-70 97 90 www.terri.se	Drawing nr: 702832 =T3 +P4
E	Radio/Eber	2022-01-27	CV	User	CV				Bäckgatan 32 34322 Älmhult
F	AngleSens	2023-01-30	CV	Proved	RH				FIRE SAFETY SYSTEM
Status	change	date	name	Standard	InevTC	Origin F (702832)	Repl. f. E (702832)		Sheet 114 / 62 Sh.

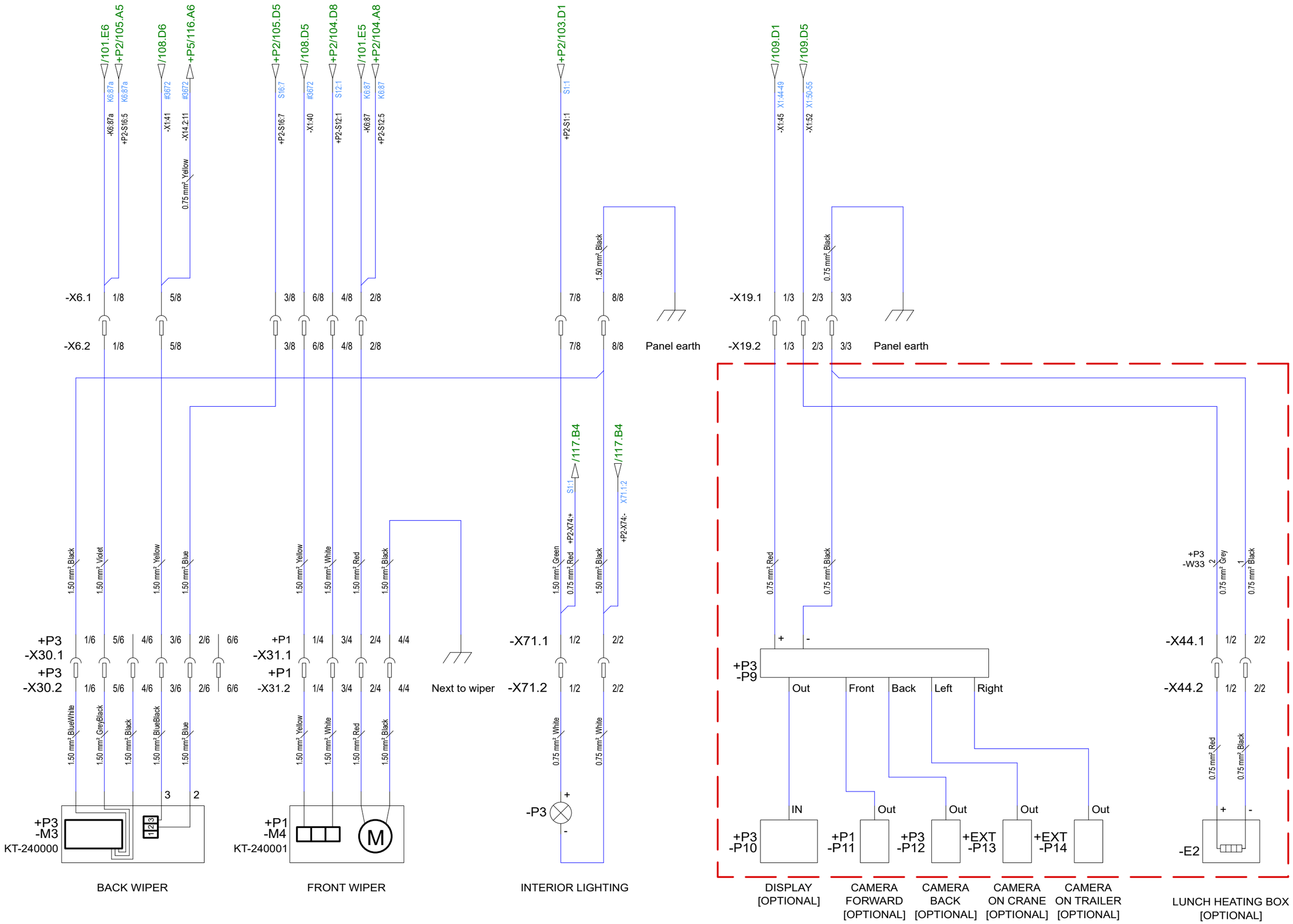

D	Valves	2022-09-06	GS	date	2023-01-30	Model: Terri 3 Wheels	TERRI FOR ALL TERRAIN	TERRI 0476-70 97 90 www.terri.se	Drawing nr: 702832
E	Radio/Eber	2022-01-27	CV	User	CV				=T3 +P4
F	AngleSens	2023-01-30	CV	Proved	RH				Bäckgatan 32 34322 Älmhult
Status	change	date	name	Standard	InevTC	Origin F (702832)	Repl. f. E (702832)		WIPERS AND CAMERAS
									Sheet 115 / 62 Sh.

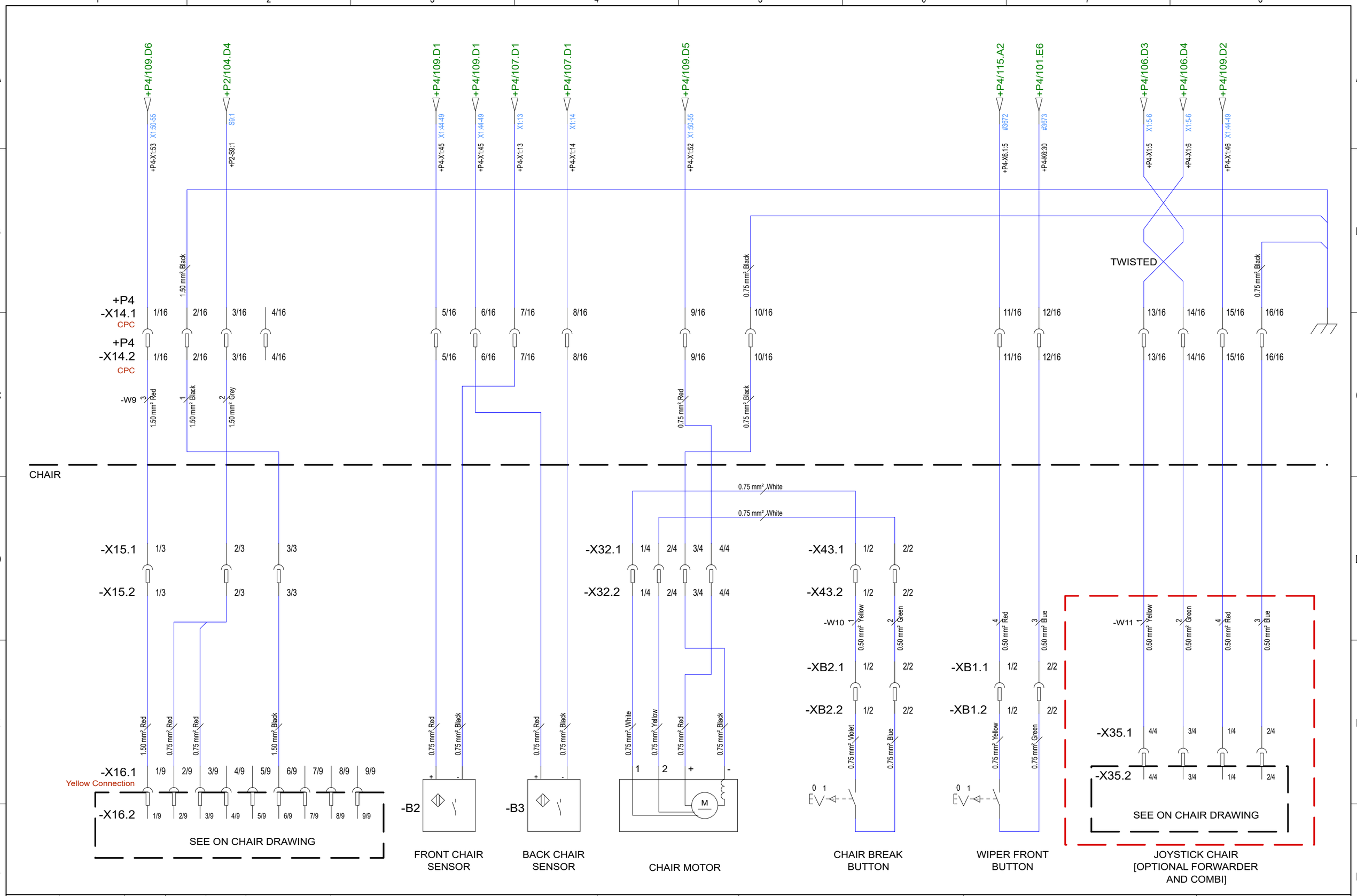

D	Valves	2022-09-06	GS	date	2023-01-30	Model: Terri 3 Wheels	TERRI FOR ALL TERRAIN	TERRI 0476-70 97 90 www.terri.se	Drawing nr: 702832
E	Radio/Eber	2022-01-27	CV	User	CV				=T3
F	AngleSens	2023-01-30	CV	Proved	RH				+P5
Status	change	date	name	Standard	InevTC	Origin F (702832)	Repl. f. E (702832)	Bäckgatan 32 34322 Älmhult	CHAIR / CPC

Sheet 116 / 62 Sh.

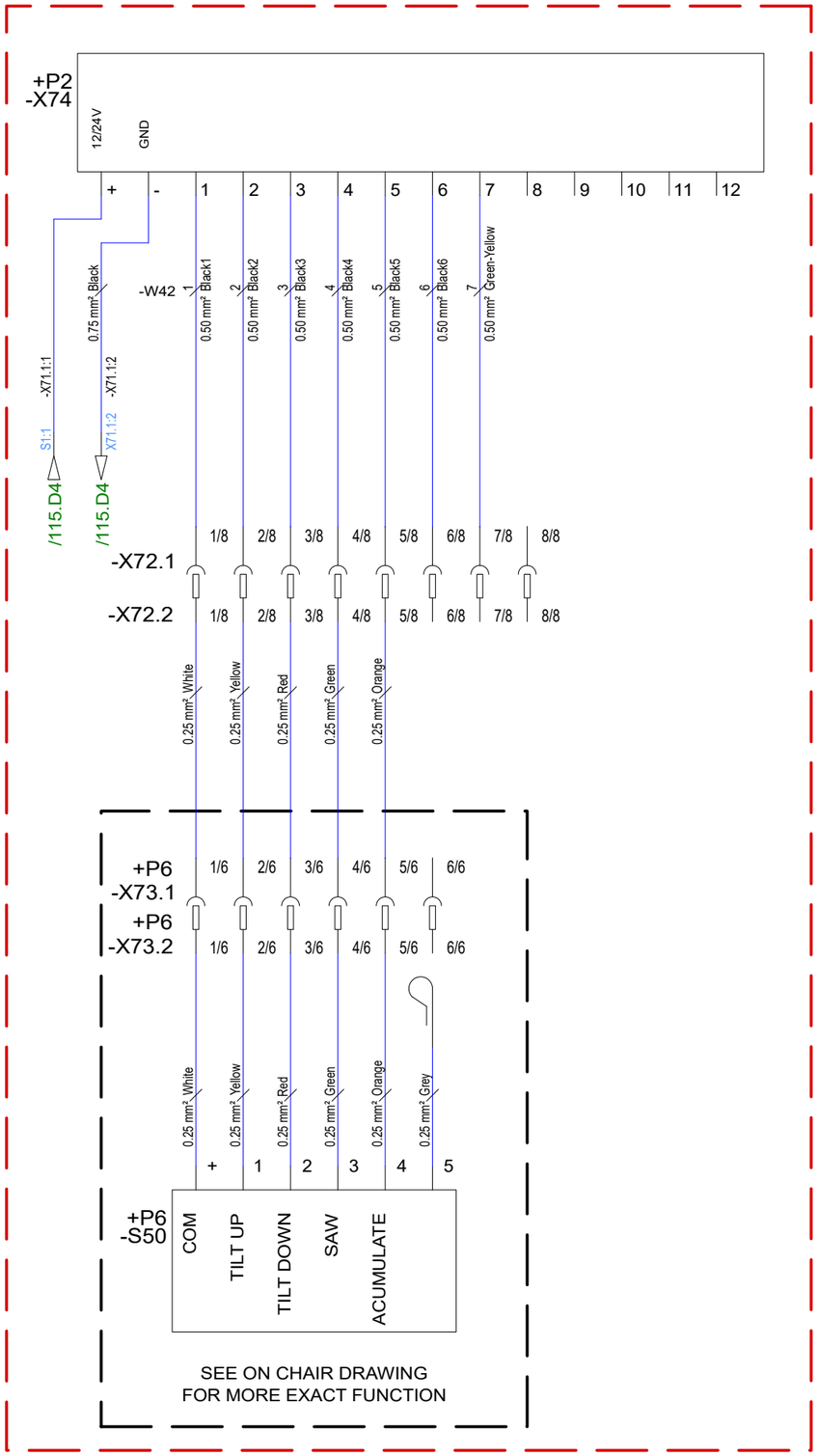

MECANIL JOYSTICK CHAIR
[OPTIONAL HARVESTER]

D	Valves	2022-09-06	GS	date	2023-01-30	Model: Terri 3 Wheels	TERRI 0476-70 97 90 www.terri.se	Drawing nr: 702832	=T3
E	Radio/Eber	2022-01-27	CV	User	CV				+P4
F	AngleSens	2023-01-30	CV	Proved	RH			Bäckgatan 32 34322 Älmhult	MECANIL JOYSTICK
Status	change	date	name	Standard	InevTC	Origin F (702832) Repl. f. E (702832)			Sheet 117 62 Sh.

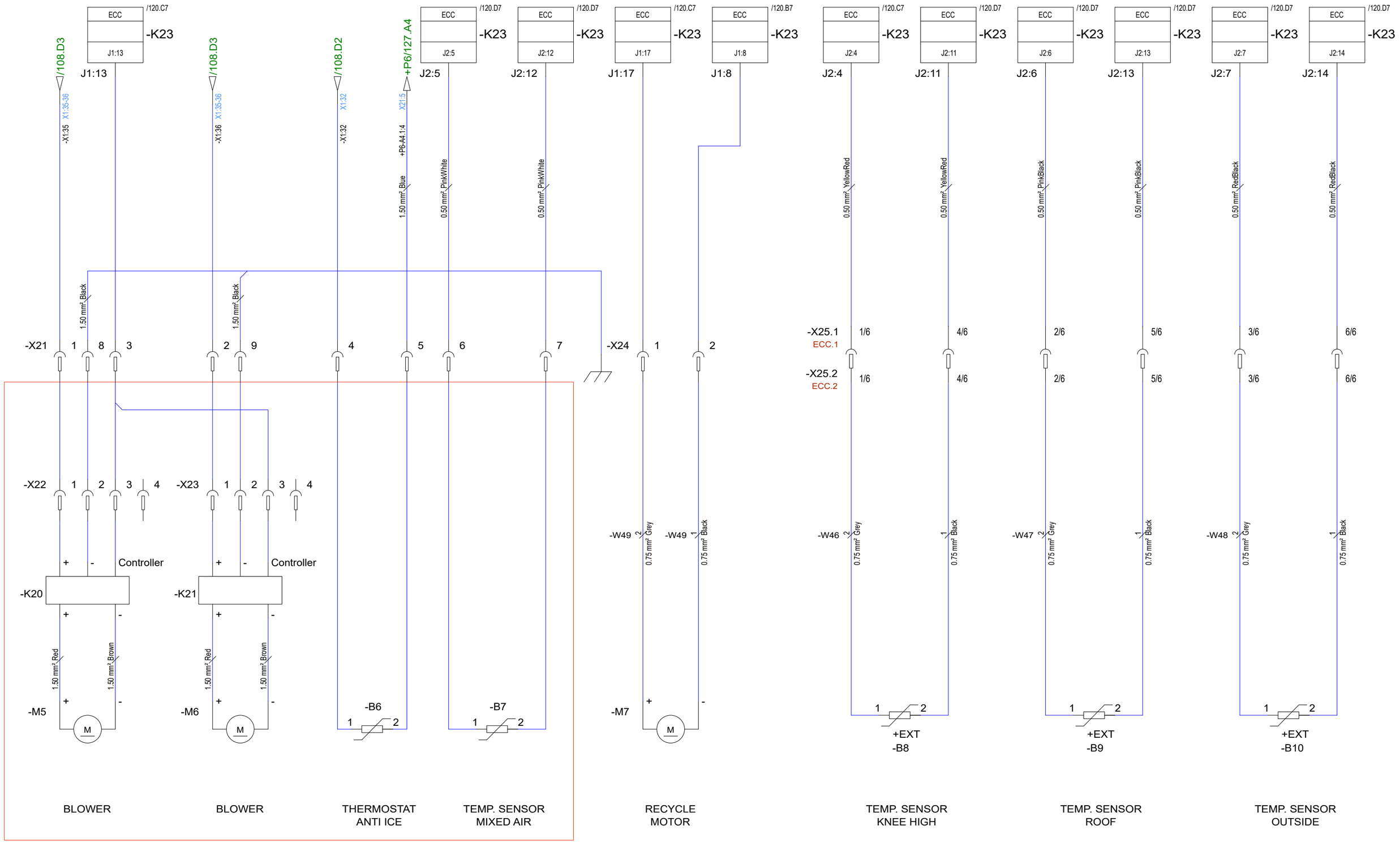

D	Valves	2022-09-06	GS	date	2023-01-30	Model: Terri 3 Wheels	TERRI FOR ALL TERRAIN	TERRI 0476-70 97 90 www.terri.se	Drawing nr: 702832 =T3 +P4
E	Radio/Eber	2022-01-27	CV	User	CV				
F	AngleSens	2023-01-30	CV	Proved	RH				Bäckgatan 32 34322 Älmhult — AC UNIT — Sheet 118 / 62 Sh.
Status	change	date	name	Standard	InevTC	Origin F (702832)	Repl. f. E (702832)		

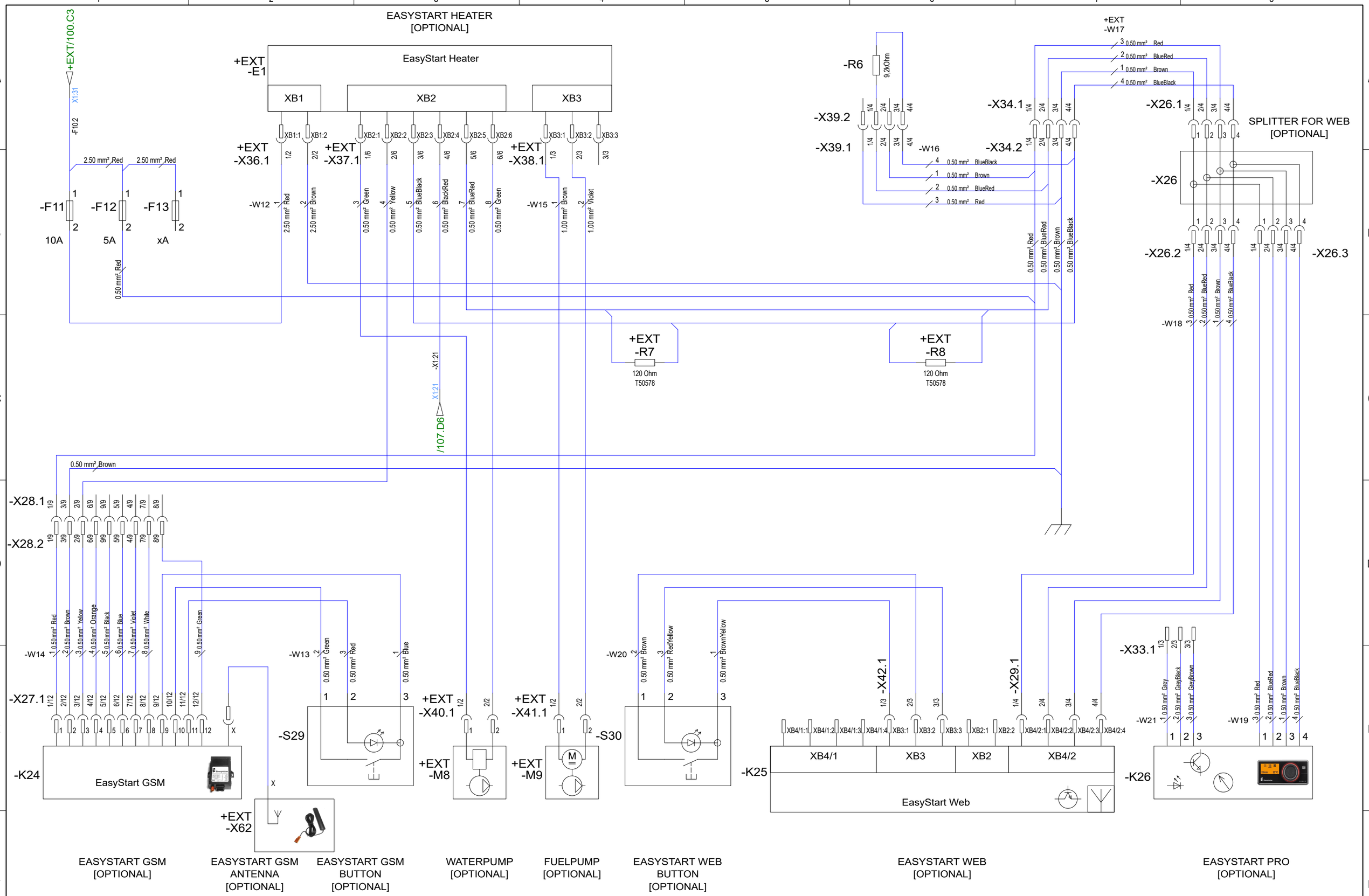

D	Valves	2022-09-06	GS	date	2023-01-30	Model: Terri 3 Wheels	TERRI FOR ALL TERRAIN	TERRI 0476-70 97 90 www.terri.se	Drawing nr: 702832 =T3 +P4
E	Radio/Eber	2022-01-27	CV	User	CV				
F	AngleSens	2023-01-30	CV	Proved	RH				Bäckgatan 32 34322 Älmhult
Status	change	date	name	Standard	InevTC	Origin F (702832)	Repl. f. E (702832)		EASYSTART

Sheet 119 / 62 Sh.

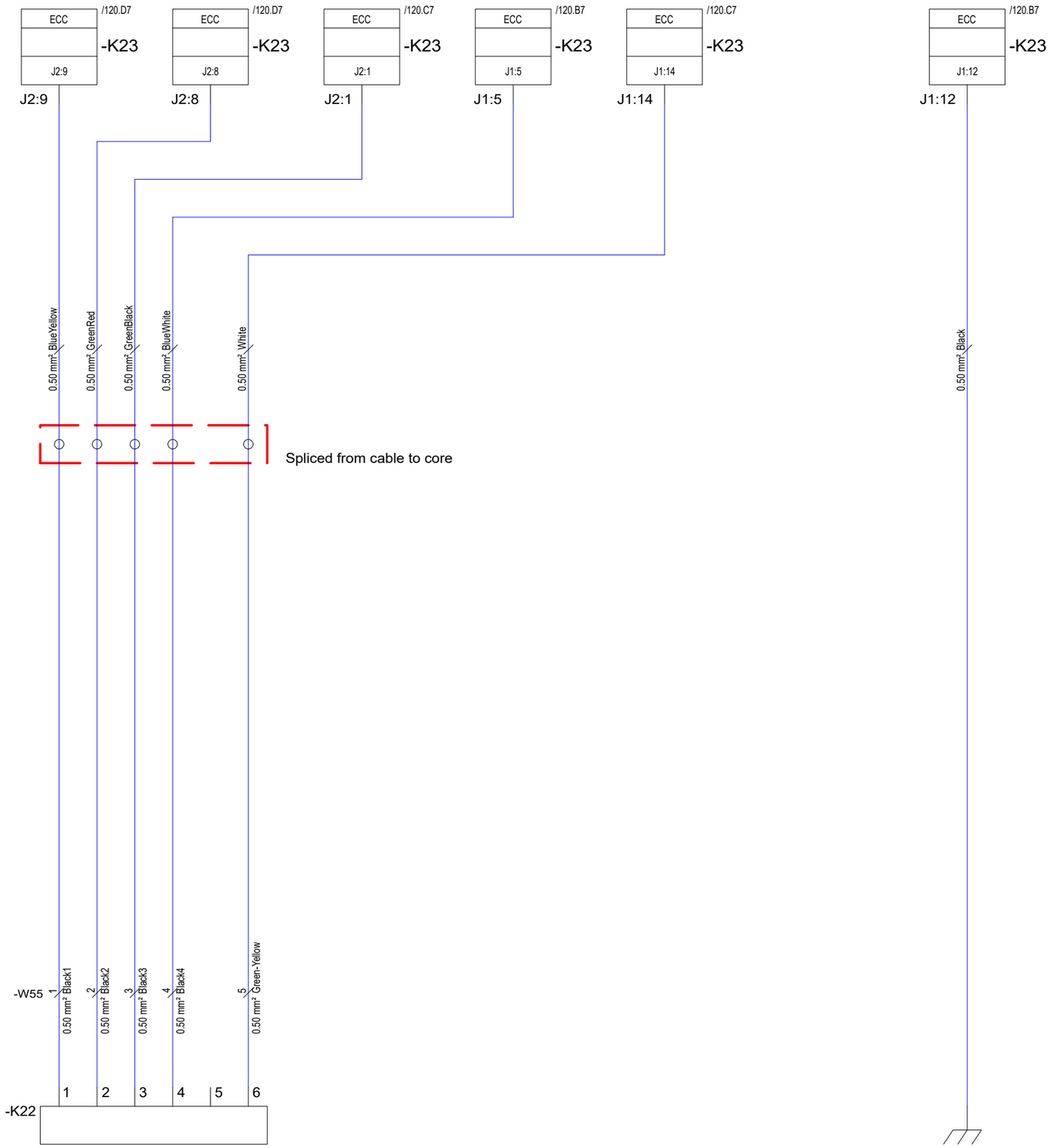

MOTOR WATER VALVE
ECC
[OPTIONAL]

-K23
8003090
ECC, CONTROL UNIT 8003090

J1			
1	J1-1	/108.F1	(3A)
2	J1-2	/107.F6	(10mA)
3	J1-3		
4	J1-4	/102.A7	
5	J1-5	/120.A3	
6	J1-6		
7	J1-7	/102.A6	
8	J1-8	/118.A5	(300mA)
9	J1-9		
10	J1-10		
11	J1-11	/109.F3	(10mA)
12	J1-12	/120.A5	(3A)
13	J1-13	/118.A1	(0-5V)
14	J1-14	/120.A4	(1A)
15	J1-15		
16	J1-16		
17	J1-17	/118.A4	(300mA)
18	J1-18		
19	J1-19		
20	J1-20		
J2			
1	J2-1	/120.A2	
2	J2-2		
3	J2-3		
4	J2-4	/118.A6	
5	J2-5	/118.A3	
6	J2-6	/118.A7	
7	J2-7	/118.A8	
8	J2-8	/120.A2	
9	J2-9	/120.A1	
10	J2-10		
11	J2-11	/118.A6	
12	J2-12	/118.A4	
13	J2-13	/118.A7	
14	J2-14	/118.A8	

J1

11	1
12	2
13	3
14	4
15	5
16	6
17	7
18	8
19	9
20	10

J2

8	1
9	2
10	3
11	4
12	5
13	6
14	7

D	Valves	2022-09-06	GS	date	2023-01-30
E	Radio/Eber	2022-01-27	CV	User	CV
F	AngleSens	2023-01-30	CV	Proved	RH
Status	change	date	name	Standard	InevTC

Model: Terri 3 Wheels

Origin F (702832) Repl. f. E (702832)

TERRI FOR ALL TERRAIN

TERRI
0476-70 97 90
www.terri.se

Drawing nr: 702832

=T3
+P4

Bäckgatan 32
34322 Älmhult

ECC

Sheet 120
62 Sh.

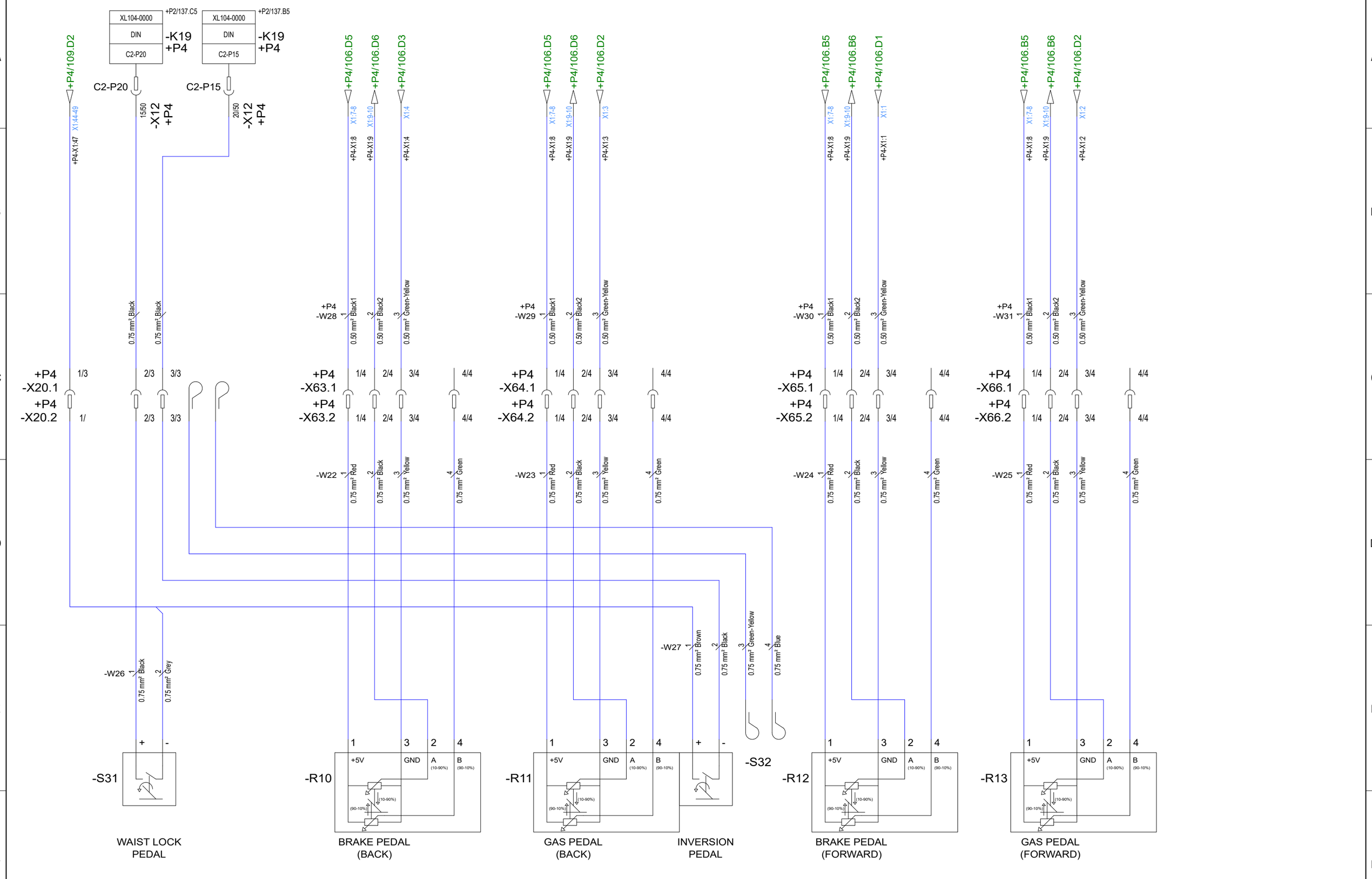

D	Valves	2022-09-06	GS	date	2023-01-30	Model: Terri 3 Wheels		TERRI 0476-70 97 90 www.terri.se	Drawing nr: 702832	=T3	
E	Radio/Eber	2022-01-27	CV	User	CV					+P6	
F	AngleSens	2023-01-30	CV	Proved	RH				Bäckgatan 32 34322 Älmhult	PEDALS	Sheet 121
Status	change	date	name	Standard	InevTC	Origin F (702832)	Repl. f. E (702832)				62 Sh.

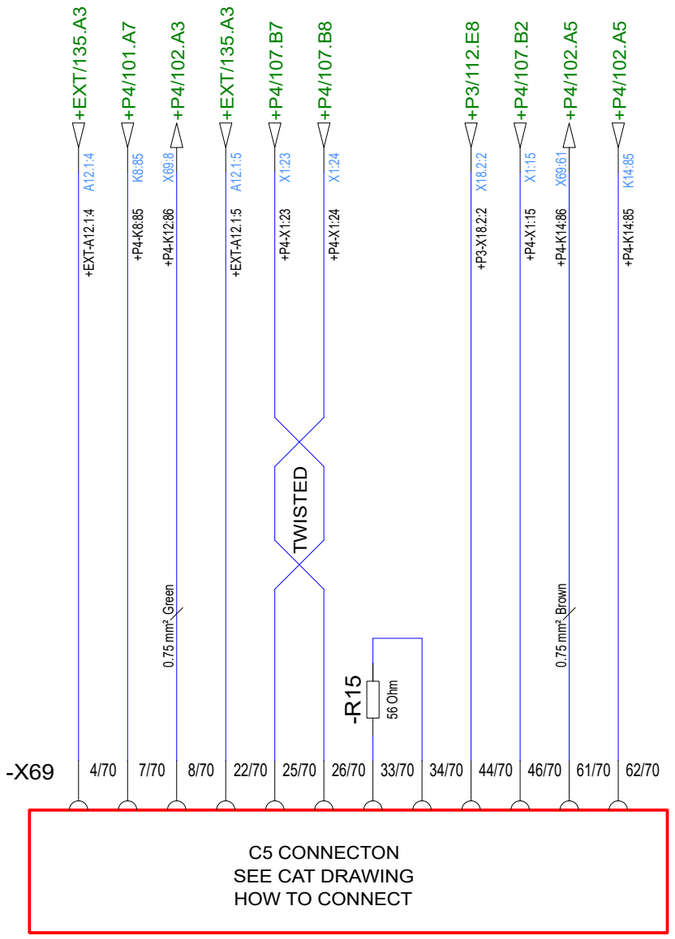

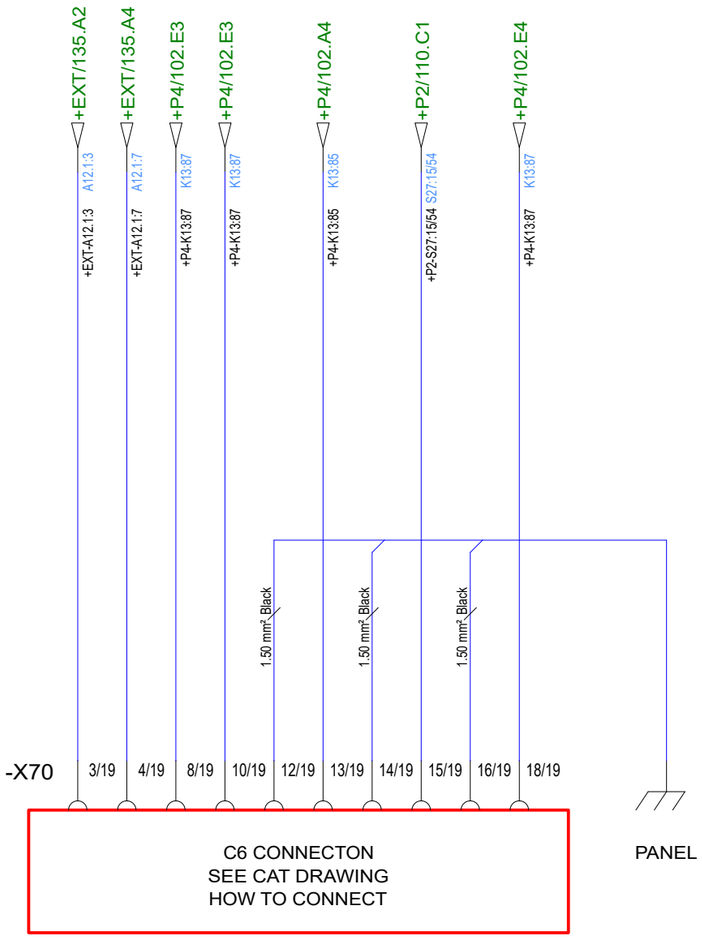

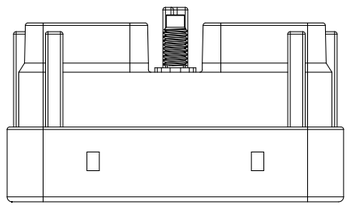

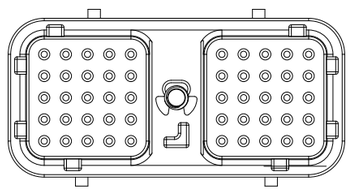

C5 CONNECTON

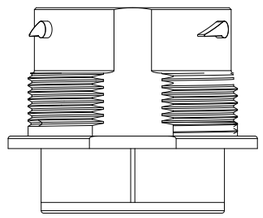

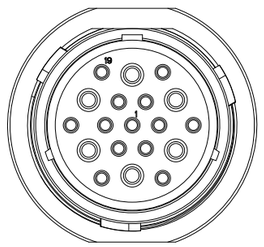

C6 CONNECTON

D	Valves	2022-09-06	GS	date	2023-01-30	Model: Terri 3 Wheels	TERRI FOR ALL TERRAIN	TERRI 0476-70 97 90 www.terri.se	Drawing nr: 702832 =T3 +P1
E	Radio/Eber	2022-01-27	CV	User	CV				
F	AngleSens	2023-01-30	CV	Proved	RH				Bäckgatan 32 34322 Älmhult
Status	change	date	name	Standard	InevTC	Origin F (702832)	Repl. f. E (702832)		C5 AND C6 CONTACT

Sheet 122 62 Sh.

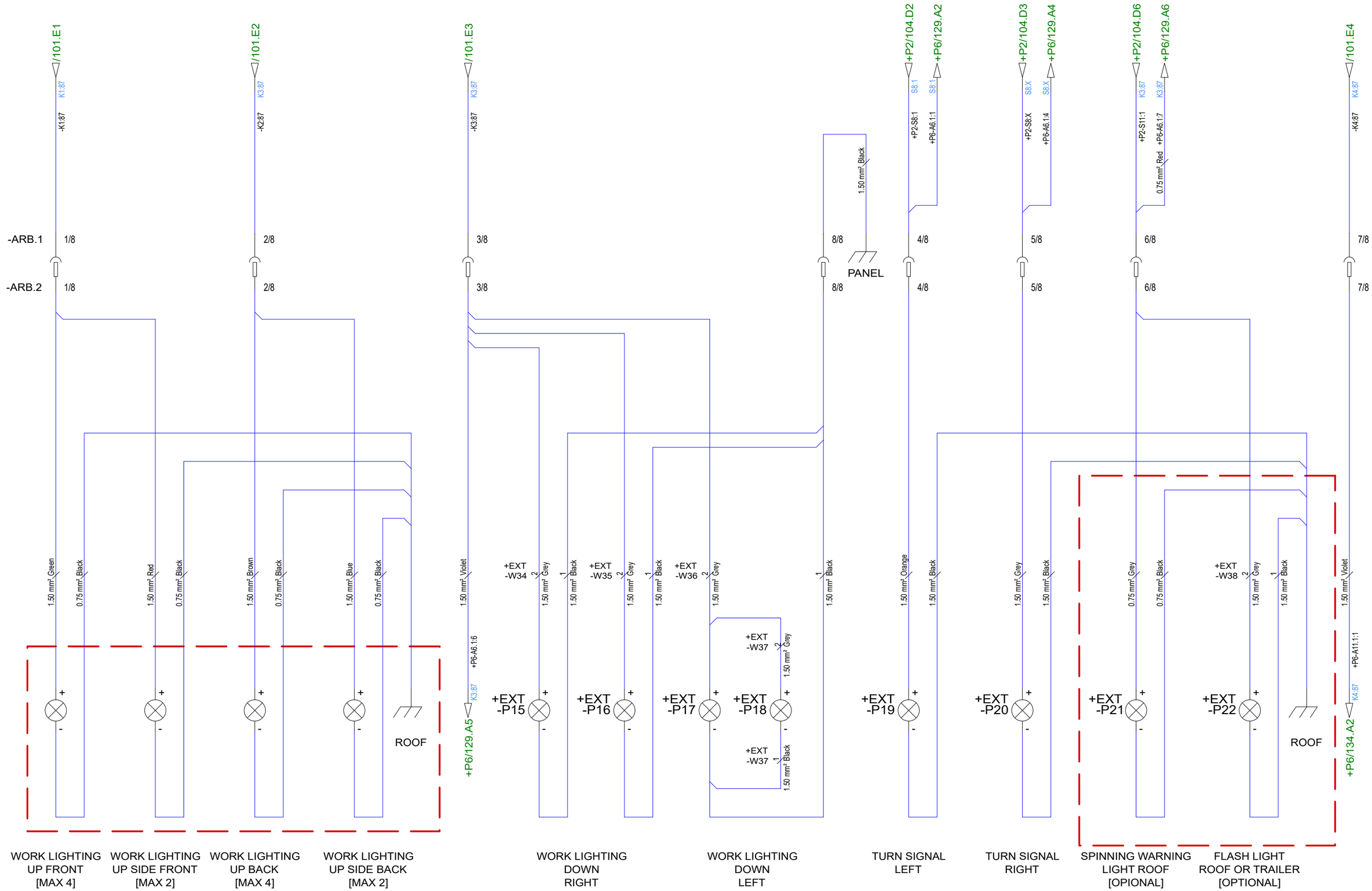

D	Valves	2022-09-06	GS	date	2023-01-30	Model: Terri 3 Wheels	TERRI 0476-70 97 90 www.terri.se	Drawing nr: 702832 =T3 +P4
E	Radio/Eber	2022-01-27	CV	User	CV			Bäckgatan 32 34322 Älmhult
F	AngleSens	2023-01-30	CV	Proved	RH			WORKLIGHT
Status	change	date	name	Standard	InevTC	Origin F (702832)	Repl. f. E (702832)	Sheet 123 / 62 Sh.

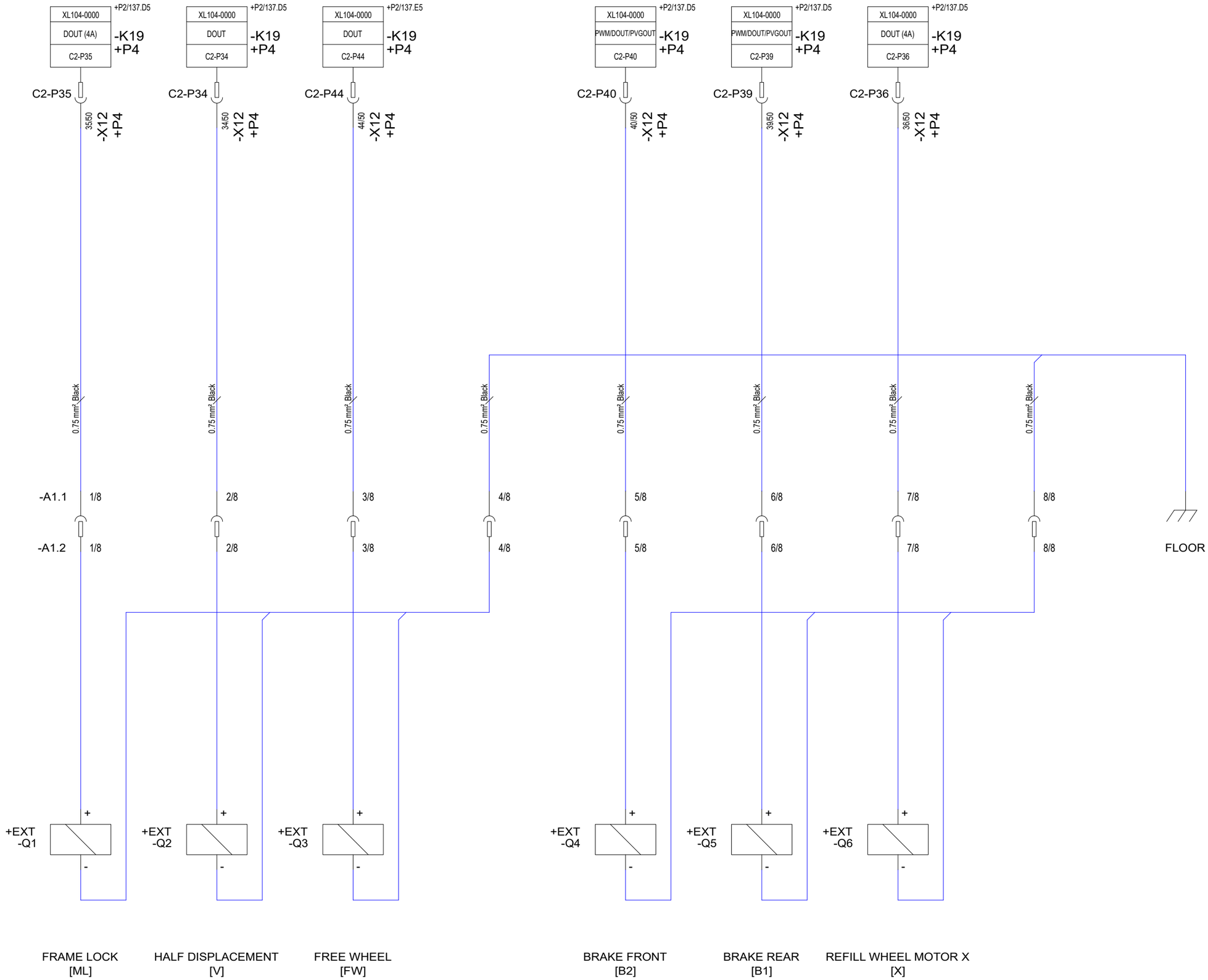

D	Valves	2022-09-06	GS	date	2023-01-30	Model: Terri 3 Wheels	TERRI FOR ALL TERRAIN	TERRI 0476-70 97 90 www.terri.se	Drawing nr: 702832 =T3 +P6
E	Radio/Eber	2022-01-27	CV	User	CV				
F	AngleSens	2023-01-30	CV	Proved	RH				Bäckgatan 32 34322 Älmhult
Status	change	date	name	Standard	InevTC	Origin F (702832)	Repl. f. E (702832)		A1 : VALVES

Sheet 124 / 62 Sh.

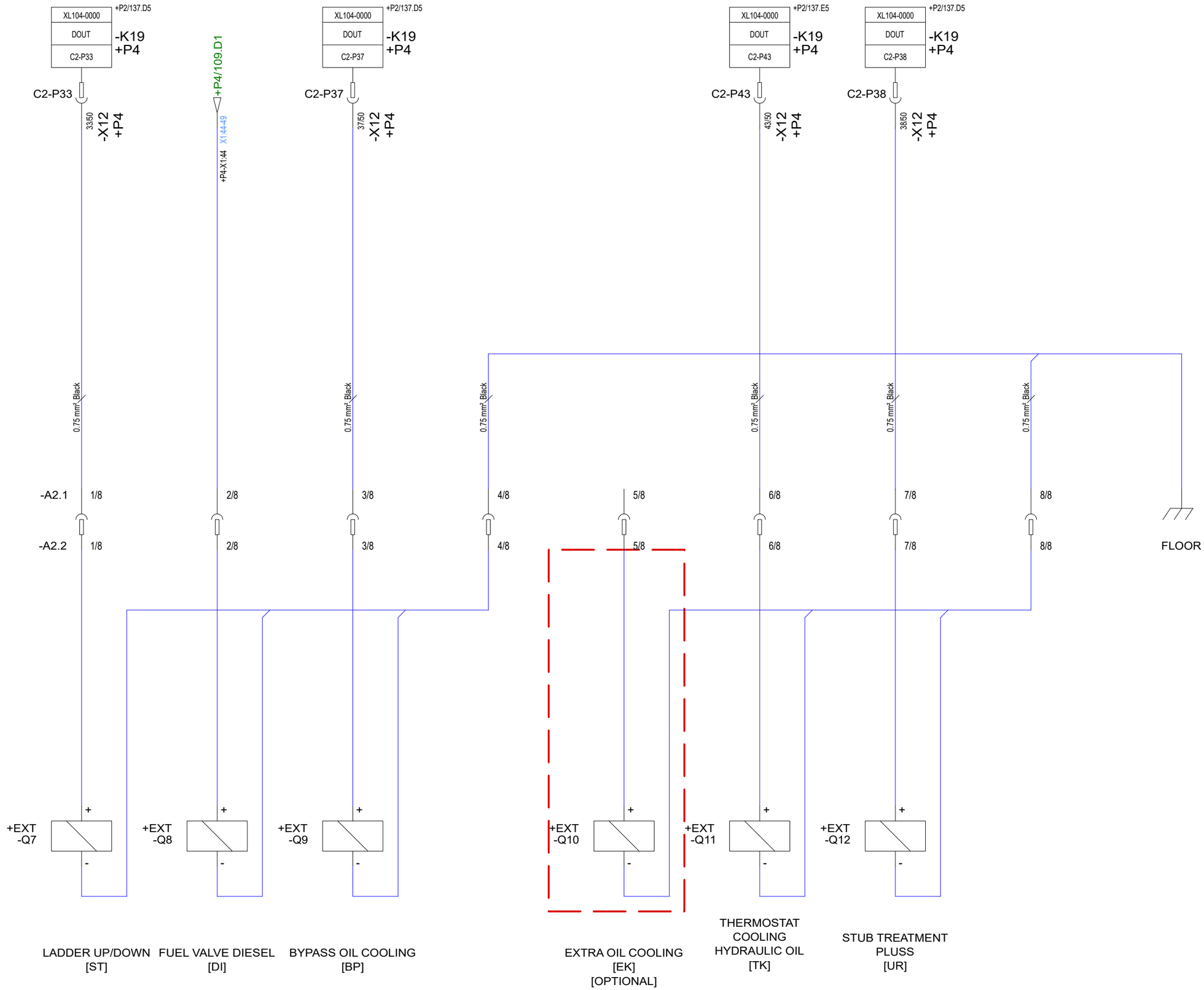

D	Valves	2022-09-06	GS	date	2023-01-30	Model: Terri 3 Wheels	TERRI FOR ALL TERRAIN	TERRI 0476-70 97 90 www.terri.se	Drawing nr: 702832
E	Radio/Eber	2022-01-27	CV	User	CV				=T3
F	AngleSens	2023-01-30	CV	Proved	RH				+P6
Status	change	date	name	Standard	InevTC	Origin F (702832)	Repl. f. E (702832)	Bäckgatan 32 34322 Älmhult	A2 : VALVES

Sheet 125
62 Sh.

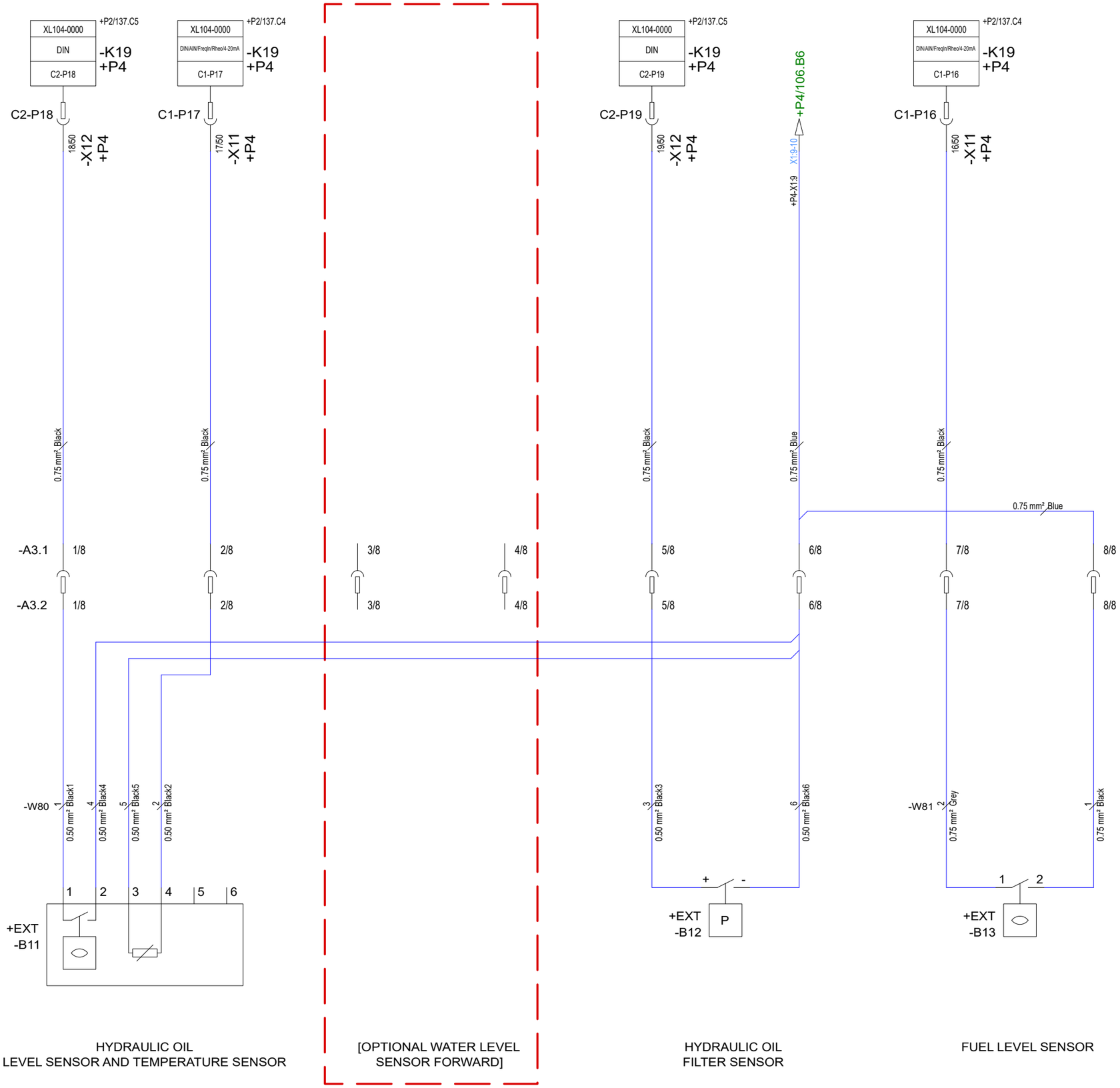

HYDRAULIC OIL
LEVEL SENSOR AND TEMPERATURE SENSOR

[OPTIONAL WATER LEVEL
SENSOR FORWARD]

HYDRAULIC OIL
FILTER SENSOR

FUEL LEVEL SENSOR

D	Valves	2022-09-06	GS	date	2023-01-30	Model: Terri 3 Wheels	TERRI FOR ALL TERRAIN	TERRI 0476-70 97 90 www.terri.se	Drawing nr: 702832 =T3 +P6
E	Radio/Eber	2022-01-27	CV	User	CV				
F	AngleSens	2023-01-30	CV	Proved	RH				Bäckgatan 32 34322 Älmhult — A3 : FLUIDS — Sheet 126 / 62 Sh.
Status	change	date	name	Standard	InevTC	Origin F (702832) Repl. f. E (702832)			

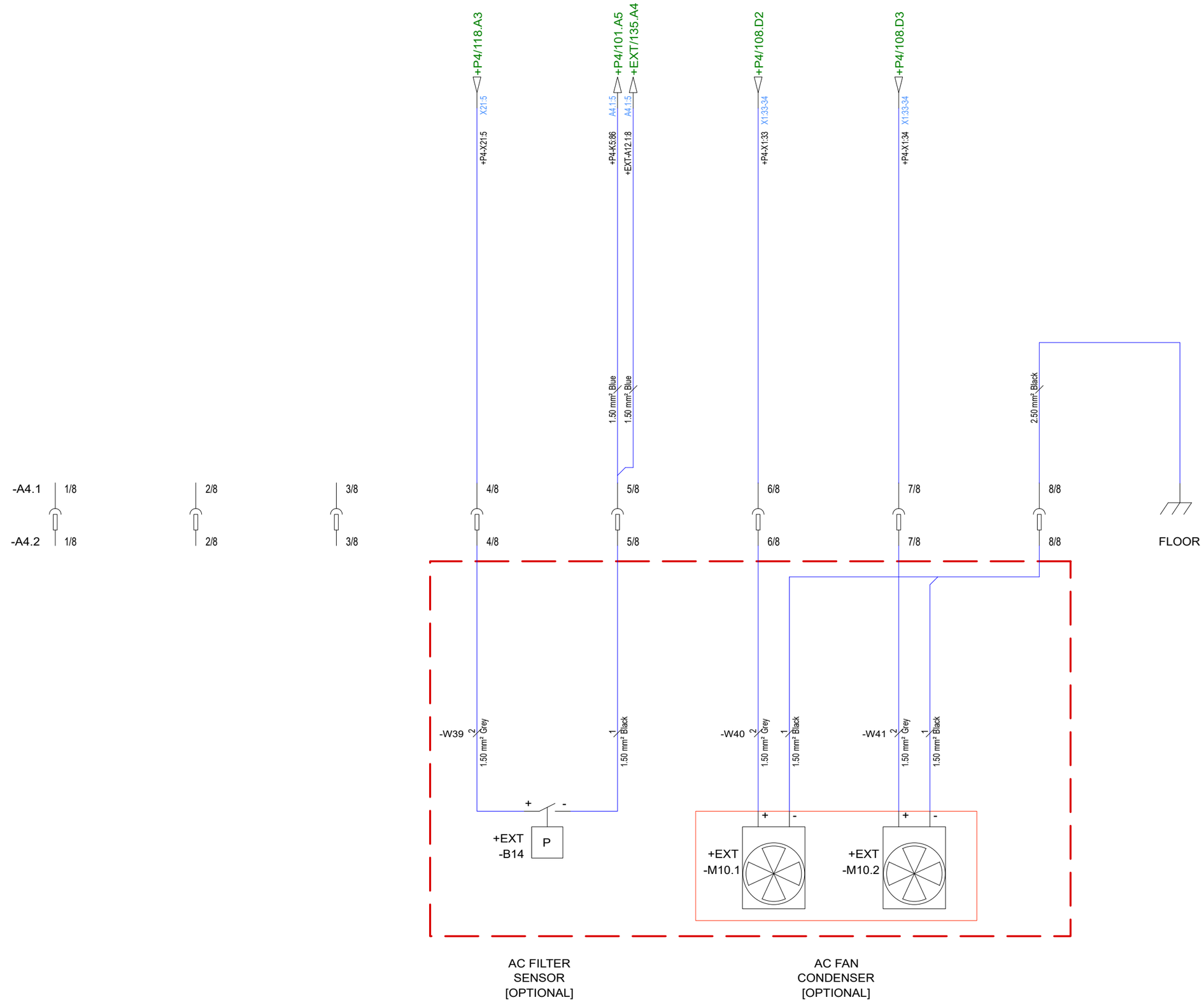

D	Valves	2022-09-06	GS	date	2023-01-30	Model: Terri 3 Wheels		
E	Radio/Eber	2022-01-27	CV	User	CV			
F	AngleSens	2023-01-30	CV	Proved	RH			
Status	change	date	name	Standard	InevTC	Origin F (702832)	Repl. f. E (702832)	

TERRI FOR ALL TERRAIN

TERRI
0476-70 97 90
www.terri.se

Drawing nr: 702832

=T3
+P6

Bäckgatan 32
34322 Älmhult

A4 : AC

Sheet 127
62 Sh.

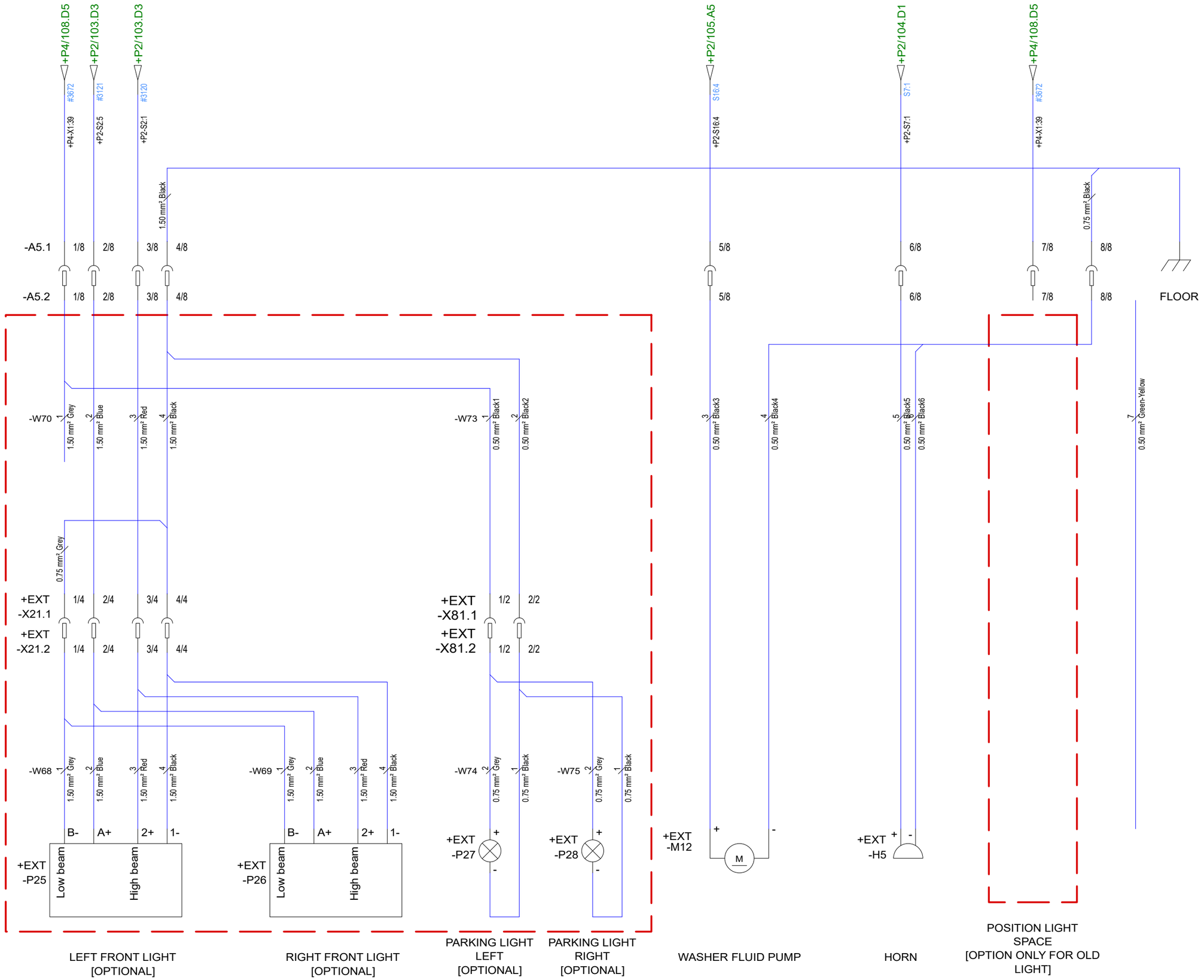

D	Valves	2022-09-06	GS	date	2023-01-30	Model: Terri 3 Wheels	TERRI FOR ALL TERRAIN	TERRI 0476-70 97 90 www.terri.se	Drawing nr: 702832 =T3 +P6
E	Radio/Eber	2022-01-27	CV	User	CV				
F	AngleSens	2023-01-30	CV	Proved	RH			Bäckgatan 32 34322 Älmhult	A5 : LIGHT FORWARD AND DIV
Status	change	date	name	Standard	InevTC	Origin F (702832)	Repl. f. E (702832)		Sheet 128 / 62 Sh.

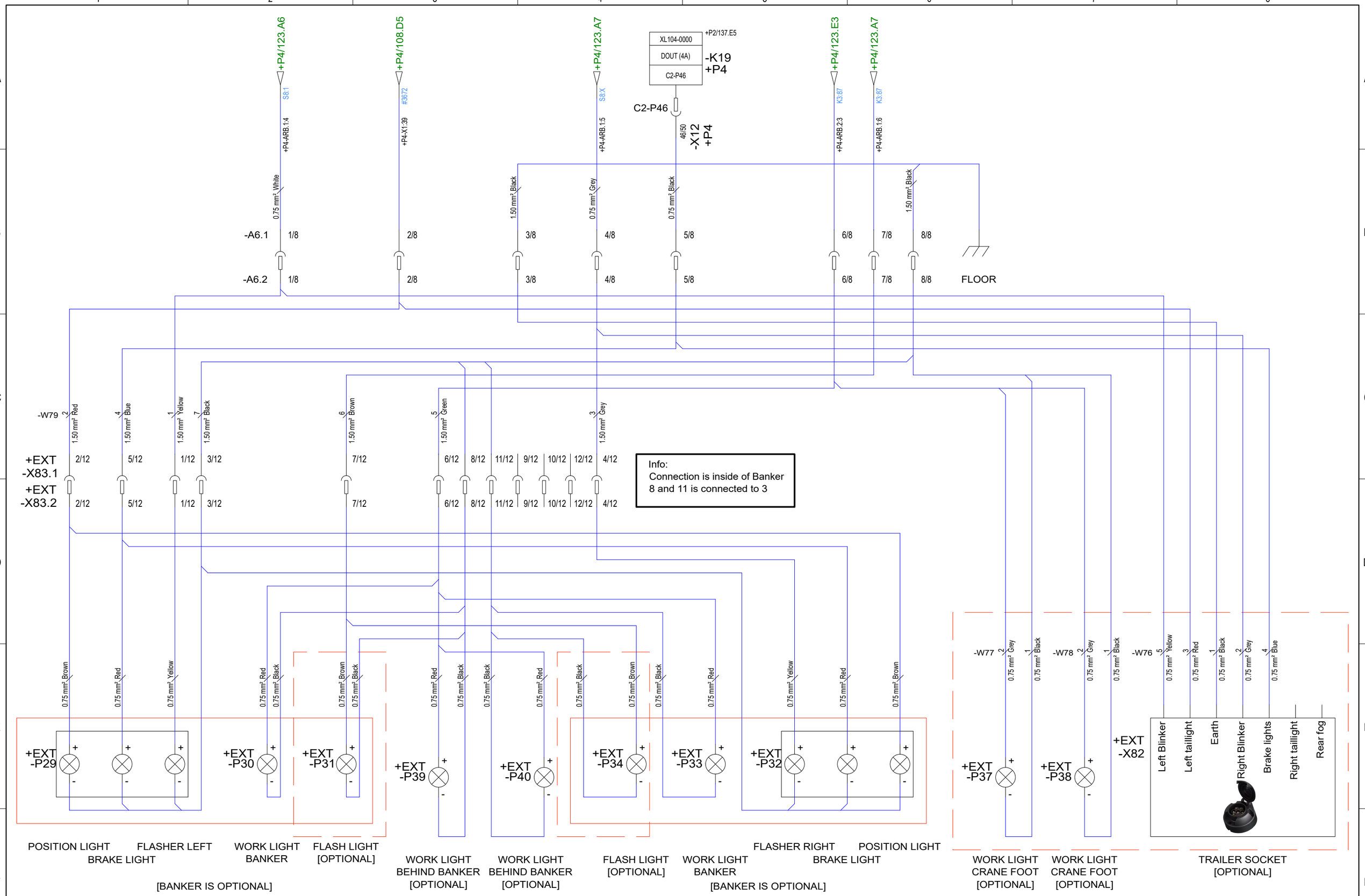

D	Valves	2022-09-06	GS	date	2023-01-30	Model: Terri 3 Wheels	TERRI FOR ALL TERRAIN	TERRI 0476-70 97 90 www.terri.se	Drawing nr: 702832	=T3	
E	Radio/Eber	2022-01-27	CV	User	CV					+P6	
F	AngleSens	2023-01-30	CV	Proved	RH				Bäckgatan 32 34322 Älmhult	A6 : TRAILER AND DIV BACK	Sheet 129
Status	change	date	name	Standard	InevTC	Origin F (702832)	Repl. f. E (702832)				62 Sh.

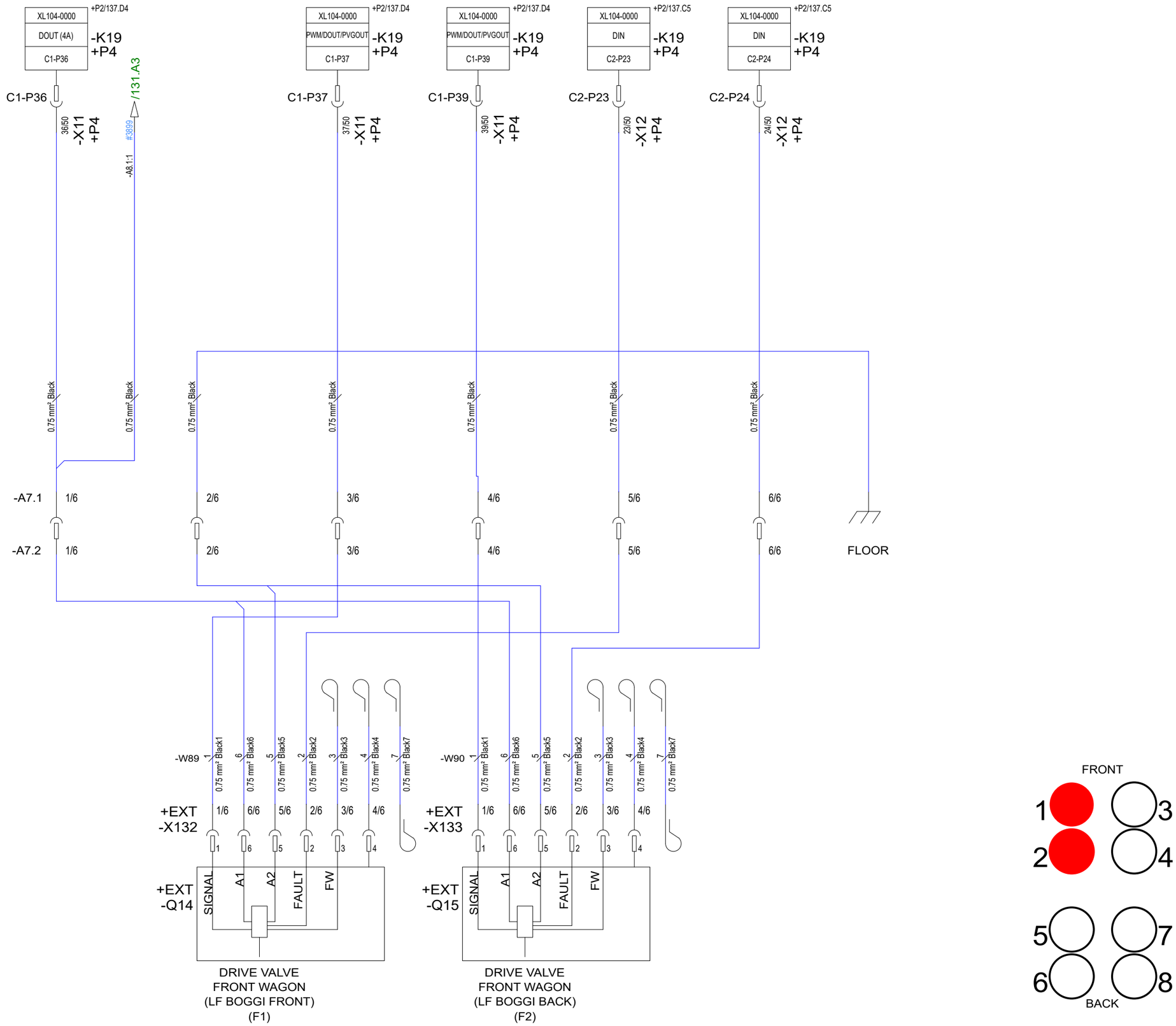

D	Valves	2022-09-06	GS	date	2023-01-30	Model: Terri 3 Wheels		TERRI FOR ALL TERRAIN	TERRI 0476-70 97 90 www.terri.se	Drawing nr: 702832	=T3
E	Radio/Eber	2022-01-27	CV	User	CV						+P6
F	AngleSens	2023-01-30	CV	Proved	RH					Bäckgatan 32 34322 Älmhult	A7 : DRIVE VALVE LF BOGGI
Status	change	date	name	Standard	InevTC	Origin F (702832)	Repl. f. E (702832)				Sheet 130 / 62 Sh.

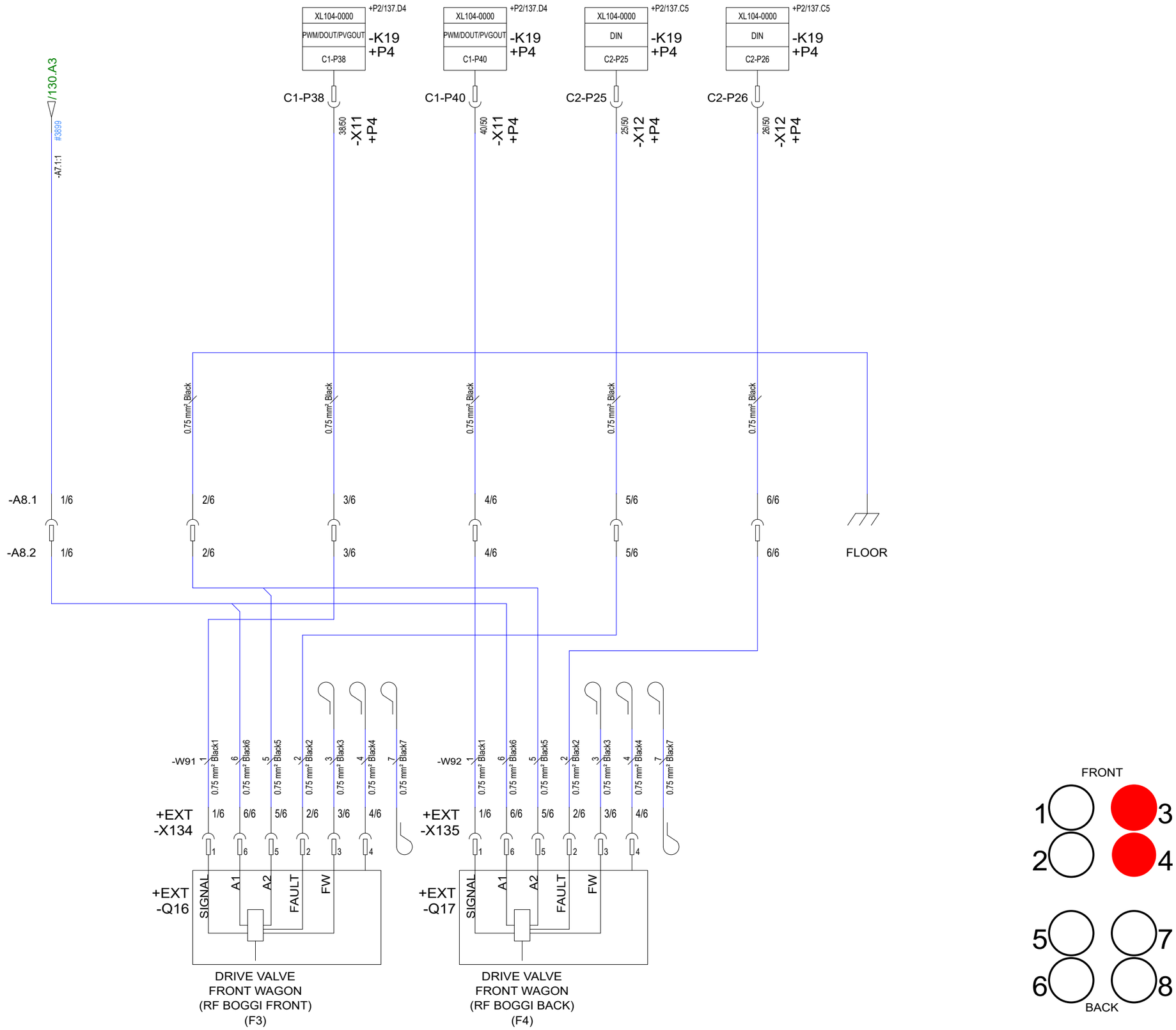

D	Valves	2022-09-06	GS	date	2023-01-30	Model: Terri 3 Wheels		TERRI FOR ALL TERRAIN	TERRI 0476-70 97 90 www.terri.se	Drawing nr: 702832	=T3
E	Radio/Eber	2022-01-27	CV	User	CV						+P6
F	AngleSens	2023-01-30	CV	Proved	RH					Bäckgatan 32 34322 Älmhult	A8 : DRIVE VALVE RF BOGGI
Status	change	date	name	Standard	InevTC	Origin F (702832)	Repl. f. E (702832)				Sheet 131 / 62 Sh.

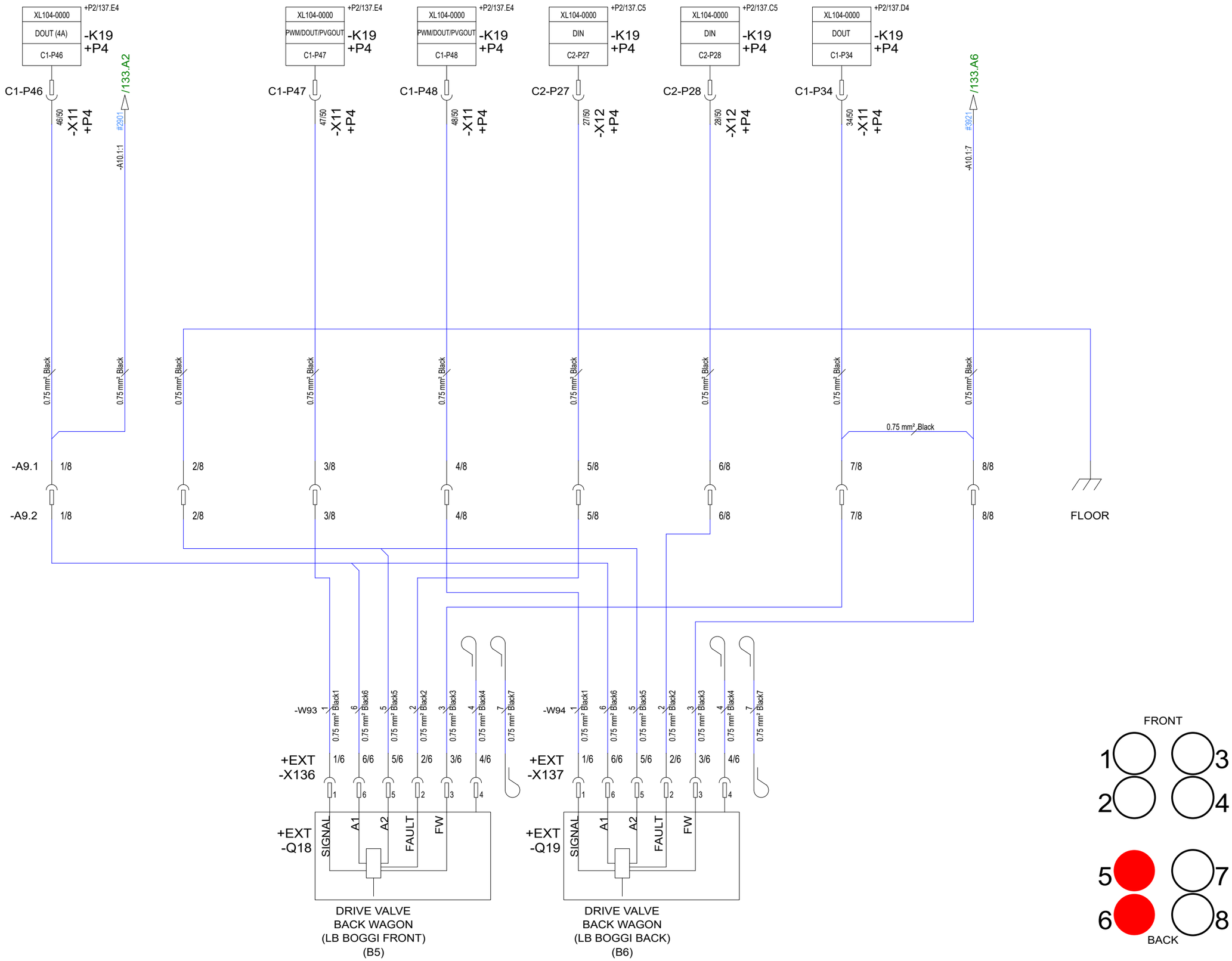

D	Valves	2022-09-06	GS	date	2023-01-30	Model: Terri 3 Wheels		TERRI FOR ALL TERRAIN	TERRI 0476-70 97 90 www.terri.se	Drawing nr: 702832	=T3	
E	Radio/Eber	2022-01-27	CV	User	CV						+P6	
F	AngleSens	2023-01-30	CV	Proved	RH					Bäckgatan 32 34322 Älmhult	A9 : DRIVE VALVE LB BOGGI	Sheet 132
Status	change	date	name	Standard	InevTC	Origin F (702832)	Repl. f. E (702832)					62 Sh.

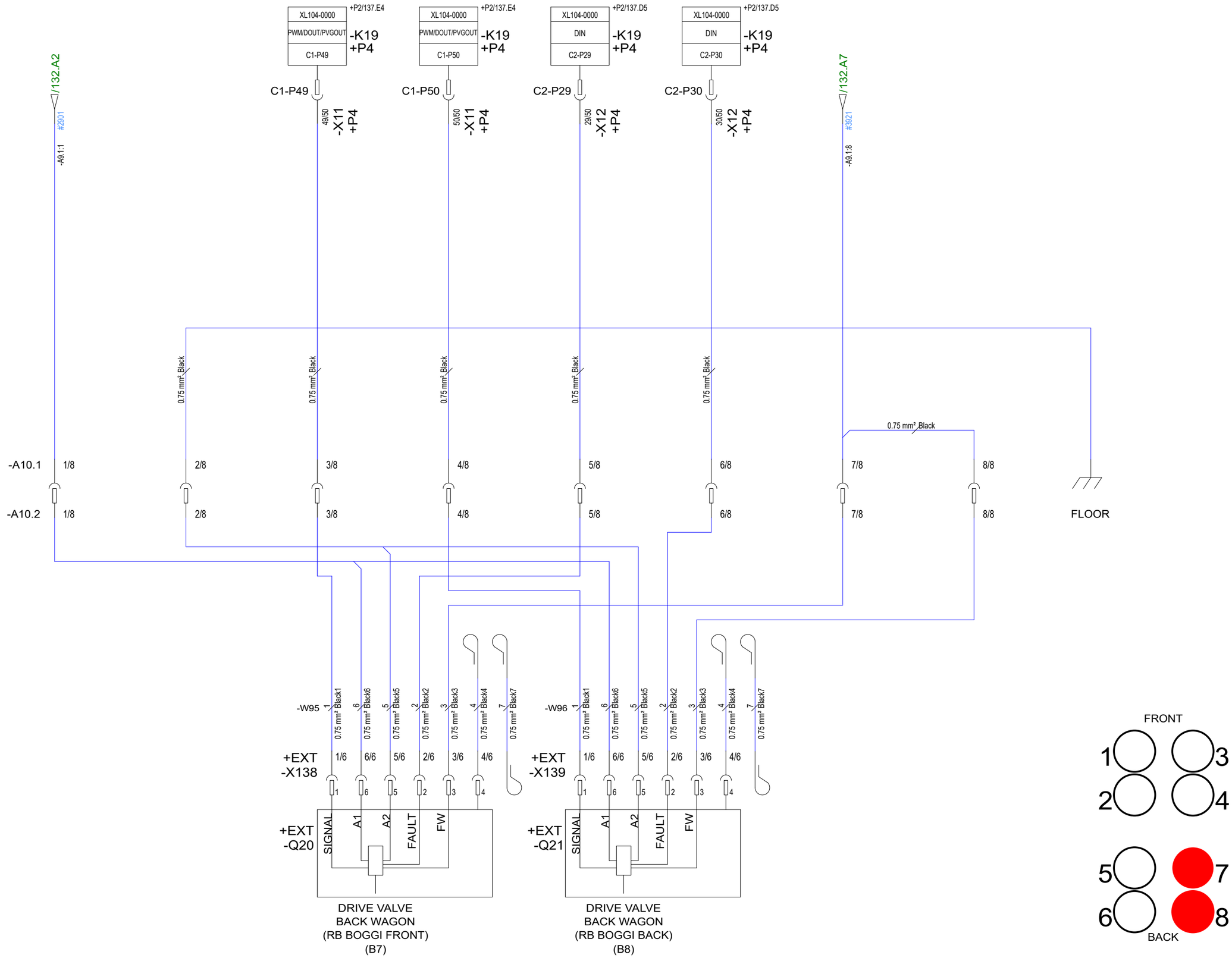

D	Valves	2022-09-06	GS	date	2023-01-30	Model: Terri 3 Wheels		TERRI FOR ALL TERRAIN	TERRI 0476-70 97 90 www.terri.se	Drawing nr: 702832	=T3
E	Radio/Eber	2022-01-27	CV	User	CV						+P6
F	AngleSens	2023-01-30	CV	Proved	RH					Bäckgatan 32 34322 Älmhult	A10 : DRIVE VALVE RB BOGGI
Status	change	date	name	Standard	InevTC	Origin F (702832)	Repl. f. E (702832)				Sheet 133 / 62 Sh.

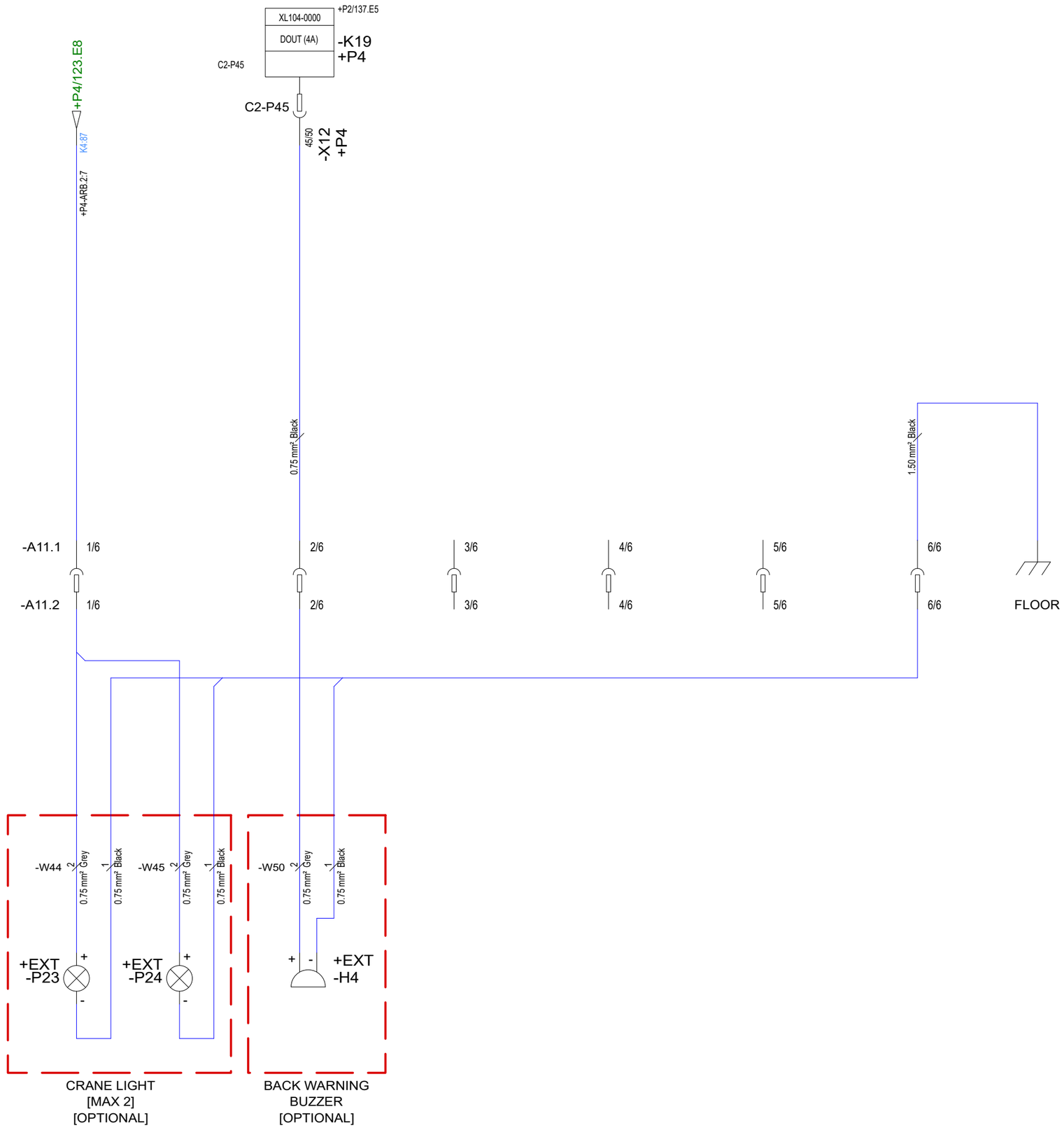

D	Valves	2022-09-06	GS	date	2023-01-30	Model: Terri 3 Wheels		TERRI 0476-70 97 90 www.terri.se	Drawing nr: 702832
E	Radio/Eber	2022-01-27	CV	User	CV				=T3
F	AngleSens	2023-01-30	CV	Proved	RH				+P6
Status	change	date	name	Standard	InevTC	Origin F (702832)	Repl. f. E (702832)		Bäckgatan 32 34322 Älmhult

A11 : EXTRA

Sheet 134
62 Sh.

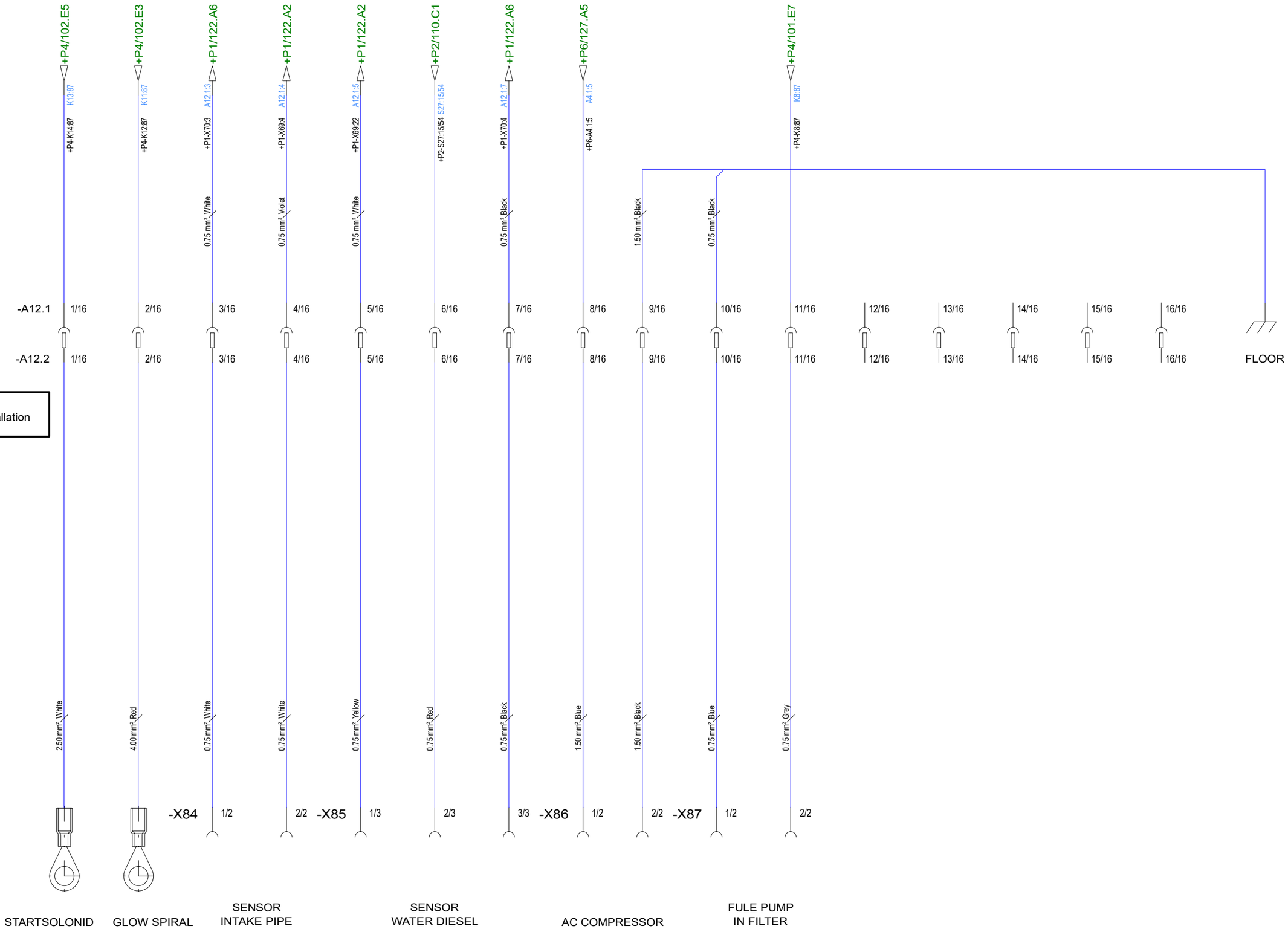

Info:
See sheet 138 for installation

D	Valves	2022-09-06	GS	date	2023-01-30	Model: Terri 3 Wheels			
E	Radio/Eber	2022-01-27	CV	User	CV				
F	AngleSens	2023-01-30	CV	Proved	RH				
Status	change	date	name	Standard	InevTC	Origin F (702832)	Repl. f. E (702832)		

TERRI FOR ALL TERRAIN

TERRI
0476-70 97 90
www.terri.se

Drawing nr: 702832

=T3
+EXT

Bäckgatan 32
34322 Älmhult

A12 : CAT ENGINE

Sheet 135
62 Sh.

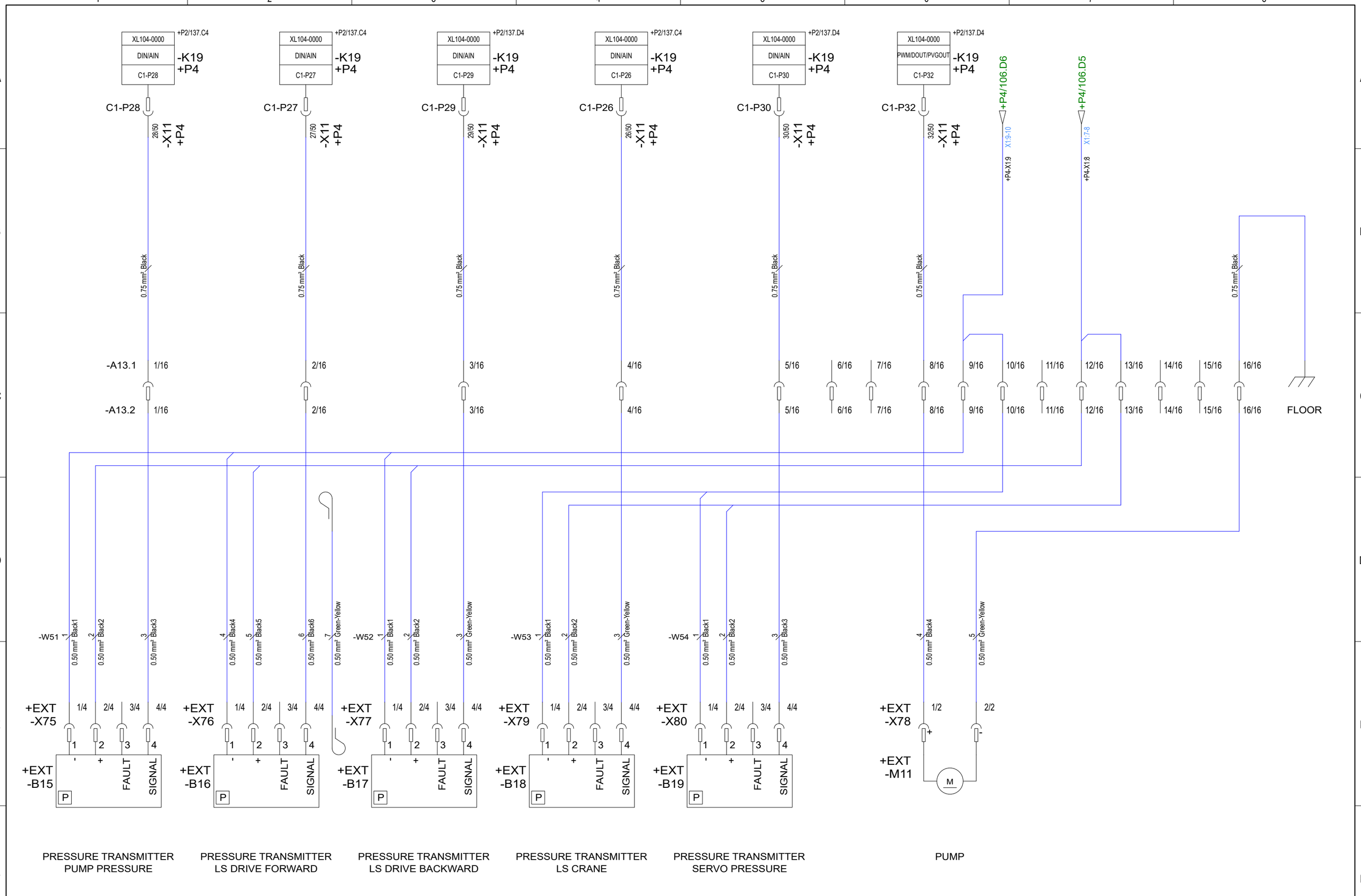

D	Valves	2022-09-06	GS	date	2023-01-30	Model: Terri 3 Wheels	TERRI FOR ALL TERRAIN	TERRI 0476-70 97 90 www.terri.se	Drawing nr: 702832 =T3 +P6
E	Radio/Eber	2022-01-27	CV	User	CV				
F	AngleSens	2023-01-30	CV	Proved	RH				Bäckgatan 32 34322 Älmhult
Status	change	date	name	Standard	InevTC	Origin F (702832) Repl. f. E (702832)			A13 : HYDRAULIC STEERING

Sheet 136 / 62 Sh.

-K18
KT-3791203
DM430E-0-1-1-0

C1			
1	Power ground -	+P4/109.A7	X1:55 : Fuse
2	Power supply +	+P4/109.F6	Earth
3	CAN 0 +	+P4/106.F3	X1:5 : Terminal
4	CAN 0 -	+P4/106.F4	X1:6 : Terminal
5	AnIn/CAN 0 Shield		
6	DigIn/AnIn	/105.D6	S20:1 : Gear Switch 1
7	DigIn/AnIn	/105.D6	Gear Switch 3
8	DigIn/AnIn		
9	DigIn/AnIn	+P4/109.F2	X1:48 : Fuse
10	Multifunction input		
11	Multifunction input		
12	Digital out (0.5A sinking)	+P4/109.F8	X68.2:2 : Warning system
C2			
1	Device Vbus		
2	Device data -		
3	Device data +		
4	Ground		
5	Ground		
6	RS232 Rx		
7	RS232 Tx		
8	NC		

-X10
5/12 8/12 10/12 11/12

+P4 -K19
KT-791204
XL104-0000

C1			
1	CPU ground -	+P4/107.A7	X1:22 : CPU Ground
2	CPU supply +	+P4/109.F3	X1:48 : CPU Power
3	CAN 0+	+P4/106.A4	X1:5 : DM430, Joysticks
4	CAN 0-	+P4/106.A4	X1:6 : DM430, Joysticks
5	CAN 0 shield/AIN		
6	DIN/AIN		Extra function
7	DIN/AIN		Extra function
8	Sensor power (5V)	+P4/106.A6	X1:8
9	Sensor ground	+P4/106.A6	X1:9
10	DIN/AIN/Freq	/110.A3	X54.1:3 : Potentiometer
11	DIN/AIN		Extra function with max pressure restrictions
12	DIN/AIN		Extra function with max pressure restrictions
13	CAN 1+	+P4/107.A4	X1:18 : LOGMAX, Cranevalves
14	CAN 1-	+P4/107.A5	X1:19 : LOGMAX, Cranevalves
15	CAN 1 shield/AIN		
16	DIN/AIN/FreqIn/Rheo/4-20mA	+P6/126.A7	A3.1:7 : Diesel Levelsensor
17	DIN/AIN/FreqIn/Rheo/4-20mA	+P6/126.A3	A3.1:2 : Hydraulic, oil temp
18	DIN/AIN/FreqIn/Rheo/4-20mA		
19	DIN/AIN/FreqIn/Rheo/4-20mA		
20	DIN/AIN/FreqIn	+P4/107.A6	X1:20 : Start Diesel
21	DIN/AIN/FreqIn		
22	DIN/AIN/FreqIn		
23	CAN 2+	+P4/107.A7	X1:23 : CAT Diesel
24	CAN 2-	+P4/107.A8	X1:24 : CAT Diesel
25	CAN 2 shield/AIN		
26	DIN/AIN	+P6/136.A4	A13.1:4 : Pressure transmitter LS Crane
27	DIN/AIN	+P6/136.A2	A13.1:2 : Pressure transmitter LS Drive forward
28	DIN/AIN	+P6/136.A1	A13.1:1 : Pressure transmitter Pump pressure
29	DIN/AIN	+P6/136.A3	A13.1:3 : Pressure transmitter LS Drive backward
30	DIN/AIN	+P6/136.A5	A13.1:5 : Pressure transmitter Servo pressure
31	PWM/DOUT/PVGOUT		
32	PWM/DOUT/PVGOUT	+P6/136.A6	A13.1:8 : Hydraulic Pump +
33	DOUT	/105.A8	S18:X1 : Presence switch light
34	DOUT	+P6/132.A7	A9.1:7 : Drive valve back wagon B1-B4
35	DOUT	+P4/107.A2	X1:15 : Start Diesel relay
36	DOUT (4A)	+P6/130.A3	A7.1:1 : Drive valve front wagon F1-F4
37	PWM/DOUT/PVGOUT*	+P6/130.A4	A7.1:3 : Drive valve front wagon F1
38	PWM/DOUT/PVGOUT*	+P6/131.A4	A8.1:3 : Drive valve front wagon F2
39	PWM/DOUT/PVGOUT	+P6/130.A5	A7.1:4 : Drive valve front wagon F3
40	PWM/DOUT/PVGOUT	+P6/131.A5	A8.1:4 : Drive valve front wagon F4
41	PWM/DOUT/PVGOUT		
42	PWM/DOUT/PVGOUT		
43	DOUT		
44	DOUT		
45	DOUT		
46	DOUT (4A)	+P6/132.A2	A9.1:1 : Drive valve back wagon B5-B8
47	PWM/DOUT/PVGOUT*	+P6/132.A4	A9.1:3 : Drive valve back wagon B5
48	PWM/DOUT/PVGOUT*	+P6/132.A4	A9.1:4 : Drive valve back wagon B6
49	PWM/DOUT/PVGOUT	+P6/133.A4	A10.1:3 Drive valve back wagon B7
50	PWM/DOUT/PVGOUT	+P6/133.A4	A10.1:4 : Drive valve back wagon B8

C2			
1	DIN/AIN	+P4/106.A1	X1:1 : Brake forward pedal
2	DIN/AIN	+P4/106.A2	X1:2 : Gas forward pedal
3	DIN/AIN	+P4/106.A3	X1:3 : Gas back pedal
4	DIN/AIN	+P4/106.A3	X1:4 : Brake back pedal
5	DIN/AIN		
6	DIN/AIN		
7	DIN/AIN		
8	DIN/AIN		
9	Sensor power (3-12V)		
10	Sensor ground		
11	DIN	/105.D7	S18:1 : Presence switch
12	DIN	+P4/106.A7	X1:12 : Magnet contact
13	DIN	+P4/107.A1	X1:13 : Front chair sensor
14	DIN	+P4/107.A1	X1:14 : Back chair sensor
15	DIN	+P6/121.A2	X20.1:3 : Inversion pedal
16	DIN		
17	DIN	+P4/107.A4	X1:17 : Emergency stop OK
18	DIN	+P6/126.A2	A3:1 : Hydraulic oil level sensor and temperature sensor
19	DIN	+P6/126.A5	A3:5 : Hydraulic oil filter sensor
20	DIN	+P6/121.A1	X20.1:2 : Waist lock pedal
21	DIN	/110.A6	X56.1:1 : Radio controll hyd.vinsch [Optional]
22	DIN	/110.A7	X56.1:2 : Radio controll hyd.vinsch [Optional]
23	DIN	+P6/130.A6	A7.1:5 : Status drive valve front wagon F1
24	DIN	+P6/130.A7	A6.1:7 : Status drive valve front wagon F2
25	DIN	+P6/131.A6	A8.1:5 : Status drive valve front wagon F3
26	DIN	+P6/131.A7	A8.1:6 : Status drive valve front wagon F4
27	DIN	+P6/132.A5	A9.1:5 : Status drive valve back wagon B5
28	DIN	+P6/132.A6	A9.1:6 : Status drive valve back wagon B6
29	DIN	+P6/133.A5	A10.1:5 : Status drive valve back wagon B7
30	DIN	+P6/133.A6	A10.1:6 : Status drive valve back wagon B8
31	PWM/DOUT/PVGOUT*		
32	PWM/DOUT/PVGOUT*		
33	DOUT	+P6/125.A2	A2.1:1 : Ladder Up/Down [ST]
34	DOUT	+P6/124.A3	A1.1:2 : Half displacement [V]
35	DOUT (4A)	+P6/124.A2	A1.1:1 : Frame lock [ML]
36	DOUT (4A)	+P6/124.A7	A1.1:7 : Refill wheel motor X [X]
37	DOUT	+P6/125.A4	A2.1:3 : Bypass oil cooling [BP]
38	DOUT	+P6/125.A7	A2.1:7 : Stub treatment pluss [UR]
39	PWM/DOUT/PVGOUT	+P6/124.A6	A1.1:6 : Brake rear [B1]
40	PWM/DOUT/PVGOUT	+P6/124.A5	A1.1:5 : Brake front [B2]
41	PWM/DOUT/PVGOUT*		
42	PWM/DOUT/PVGOUT*		
43	DOUT	+P6/125.A6	A2.1:6 : Thermostat cooling hydraulic oil [TK]
44	DOUT	+P6/124.A4	A1.1:3 : Free wheel [FW]
45	DOUT (4A)	+P6/134.A4	A11.1:2 : Back warning buzzer [Optional]
46	DOUT (4A)	+P6/129.A5	A6.1:5 : Brake light
47	DOUT	/110.A5	X56.1:3 : Radio controll hyd.vinsch [Optional]
48	DOUT		
49	PWM/DOUT/PVGOUT		
50	PWM/DOUT/PVGOUT		

C			
1	Power ground -	+P4/109.F6	Earth (Panel)
2	Power supply +	+P4/109.F4	X1:49 : Fuse
3	Power supply +	+P4/109.F5	X1:49 : Fuse
4	Power supply +	+P4/109.F5	X1:49 : Fuse

+P4 -X11
5/50 6/50 7/50 11/50 12/50 15/50 18/50 19/50 21/50 22/50 25/50 31/50 41/50 42/50 43/50 44/50 45/50

+P4 -X12
5/50 6/50 7/50 8/50 9/50 10/50 16/50 31/50 32/50 41/50 42/50 48/50 49/50 50/50

D	Valves	2022-09-06	GS	date	2023-01-30
E	Radio/Eber	2022-01-27	CV	User	CV
F	AngleSens	2023-01-30	CV	Proved	RH
Status	change	date	name	Standard	InevTC

Model: Terri 3 Wheels

Origin F (702832) Repl. f. E (702832)

TERRI FOR ALL TERRAIN

TERRI
0476-70 97 90
www.terri.se

Drawing nr: 702832

=T3
+P2

Bäckgatan 32
34322 Älmhult

DISPLAY AND COMPUTER

Sheet 137
62 Sh.

TE-765013

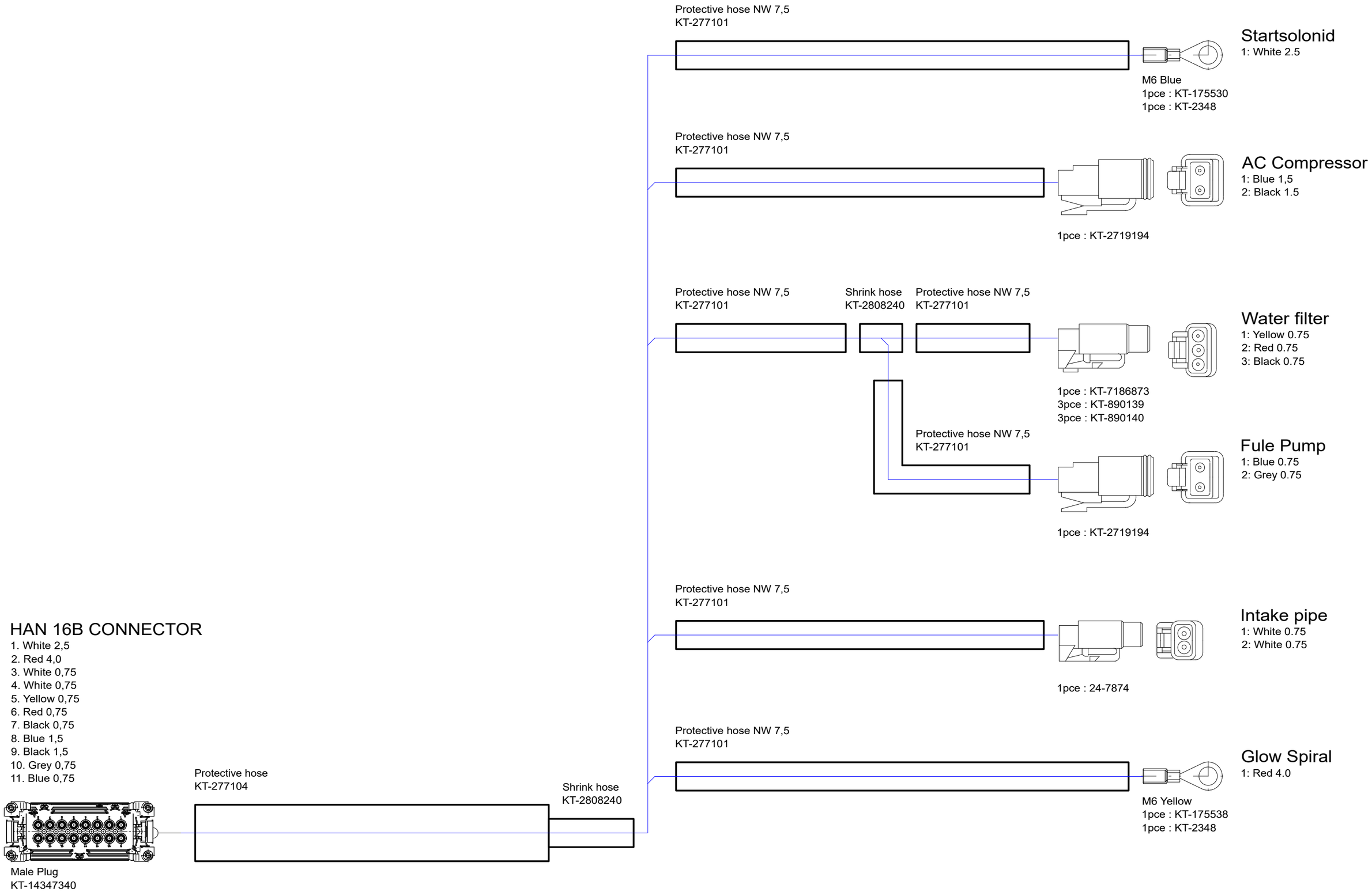

D	Valves	2022-09-06	GS	date	2023-01-30	Model: Terri 3 Wheels	TERRI FOR ALL TERRAIN	TERRI 0476-70 97 90 www.terri.se	Drawing nr: 702832 =T3 +EXT
E	Radio/Eber	2022-01-27	CV	User	CV				
F	AngleSens	2023-01-30	CV	Proved	RH				Bäckgatan 32 34322 Älmhult
Status	change	date	name	Standard	InevTC	Origin F (702832) Repl. f. E (702832)			CAT ENGINE CABLE Sheet 138 62 Sh.

CRANE VALVE PACKAGE

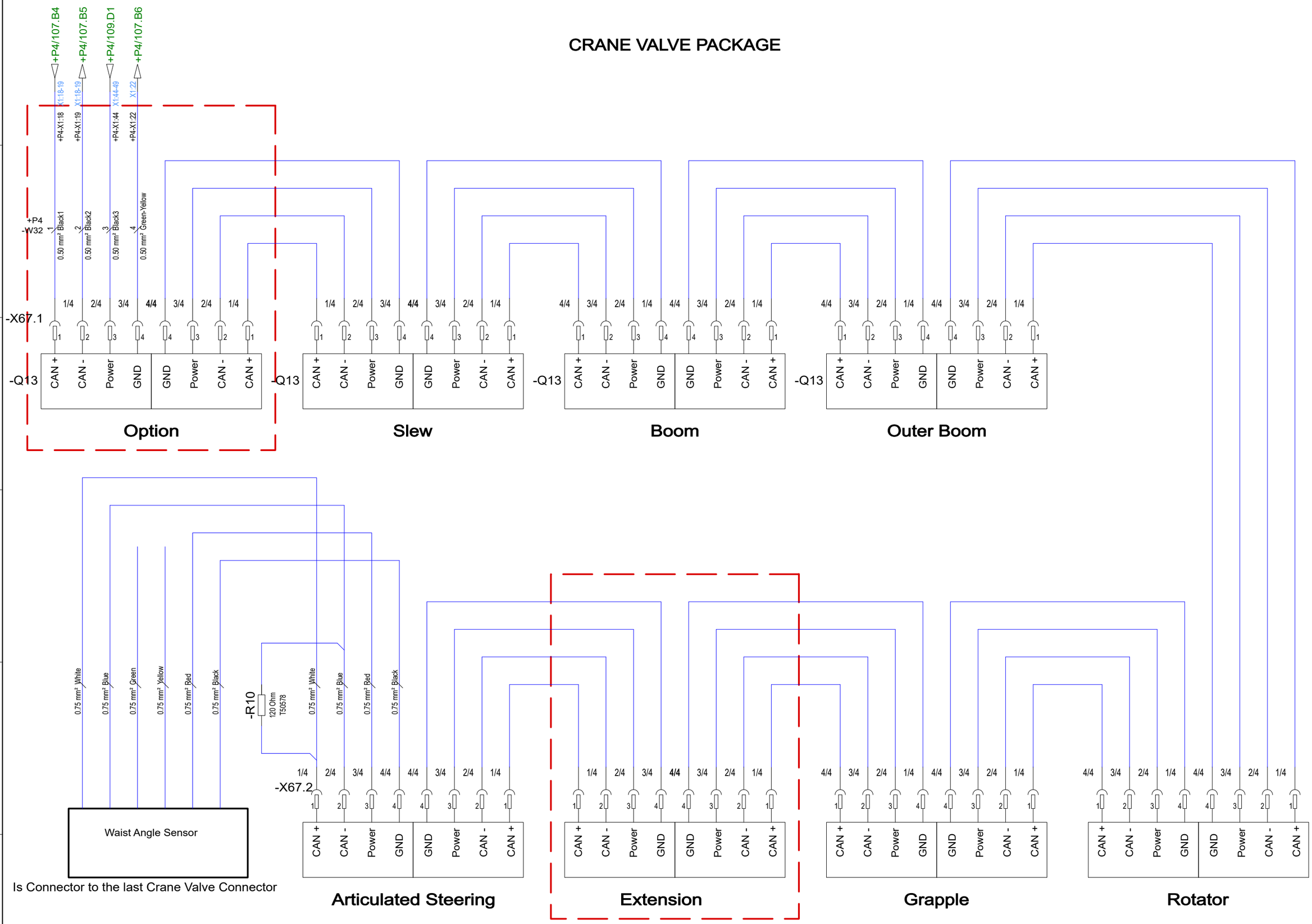

D	Valves	2022-09-06	GS	date	2023-01-30	Model: Terri 3 Wheels		TERRI FOR ALL TERRAIN	TERRI 0476-70 97 90 www.terri.se	Drawing nr: 702832	=T3
E	Radio/Eber	2022-01-27	CV	User	CV						+EXT
F	AngleSens	2023-01-30	CV	Proved	RH					Bäckgatan 32 34322 Älmhult	CAT ENGINE CABLE
Status	change	date	name	Standard	InevTC	Origin F (702832)	Repl. f. E (702832)				Sheet 139 / 62 Sh.